Misc SNF Issues
Na-Bonded

NSNFP Strategy Meeting
Washington, DC

Chris Dahl/Henry Loo
March 2008

Na-Bonded SNF Issues

- DOE-EM had ~60 MTHM of Na-bonded SNF in storage
- DOE ROD removed 25 MTHM EBR-II, ~0.3 MTHM FFTF driver fuel for EMT at MFC (ANL-W)
- ~34 MTHM of FERMI-1 blanket Na-bonded SNF under evaluation for alternative treatment
- One possibility is direct disposition

Fermi-1 Blanket vs. Other Sodium Fuel Characteristics

Sodium-bonded Fuels	MTHM	Pyroprocess Treated	Remain	Comment
EBR-II Driver	3.1	0.7	2.4	Na logged in fuel matrix
EBR-II Blanket	22.4	2.5	19.9	Bulk of Na separate from fuel matrix. High plutonium content due to long irradiation.
FFTF Driver	0.25	0	0.25	Na logged in fuel matrix
Fermi-1 Blanket	34	0	34	Bulk of Na separate from fuel matrix. Low plutonium content due to short irradiation.
Sandia Na rubble bed	0.05	0	0.05	
Total	59.8	3.2	56.6	

Report to Congress - Preferred Disposition Plan for Sodium-Bonded Spent Nuclear Fuel March 2006

Fermi-1 Blanket Chemical Reactivity Modeling

- Evaluate chemical reactivity potential of Fermi-1 blanket metallic sodium
- Determine if differences exist between blanket fuel and other sodium bonded SNF to pursue removal of RCRA status
- Analysis and Computer modeling performed under NSNFP Quality Program

Fermi-1 Blanket Configuration and Characteristics

- Assume same packaging configuration as Fermi core fuel
- Tube configuration
- U/Mo fuel
- Zirconium cladding
- 679 g of sodium per tube

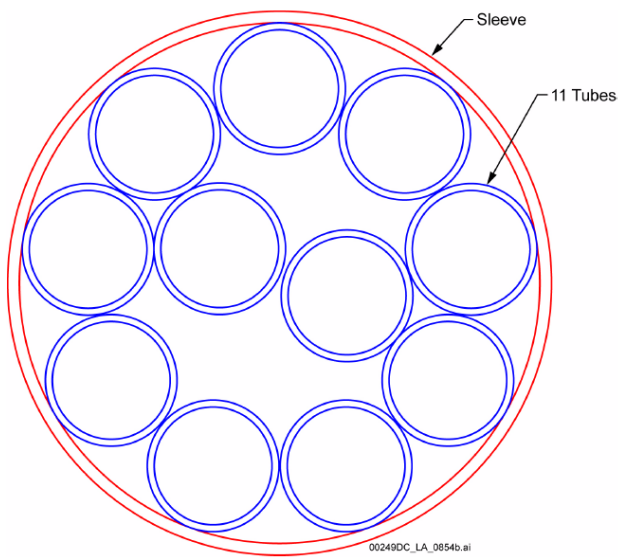

Fermi-1 Blanket Configuration and Characteristics

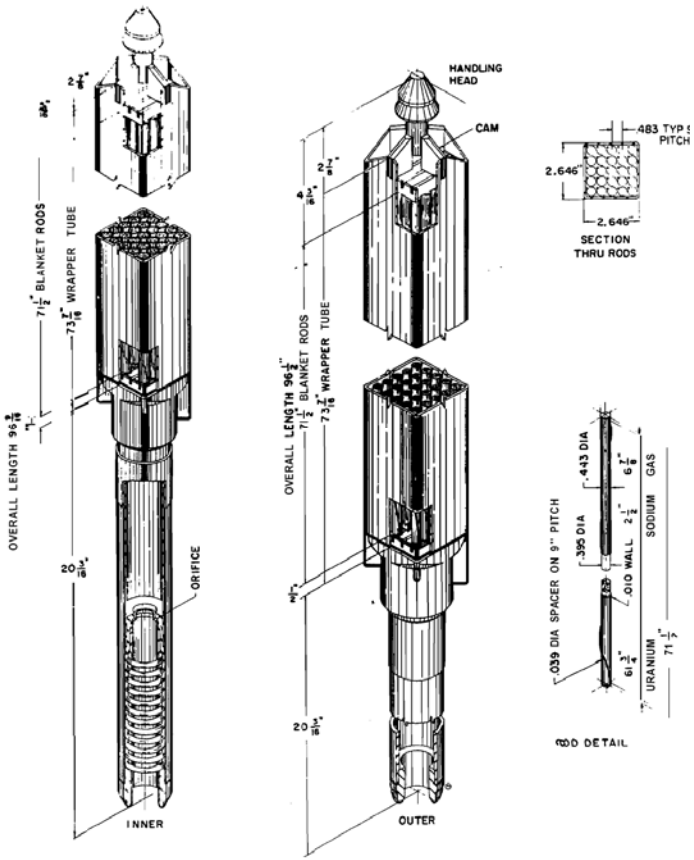

Radial blanket

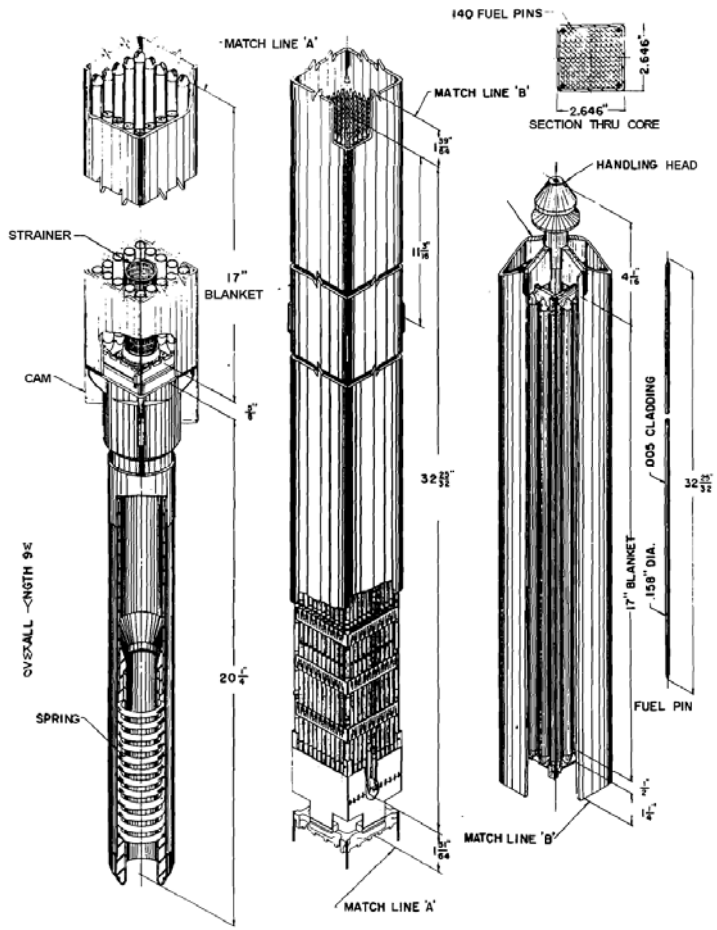

Axial blanket

Repository Water Influx

- TSPA model uses water influx of 1 liter/yr to 100 liters/yr
- If the drip shield is intact and the WP breaches, with 100% humidity air at 95°C, there will be only 3.171 lb water per lb dry air to react with the sodium

Sodium Reaction

- At the repository water influx rate, it will take 21 days to 5.8 years to react all the sodium in a canister/waste package
- Temperature increase of the waste package from the reaction is less than 60°C (react all sodium in WP instantaneously)

Sodium Reaction

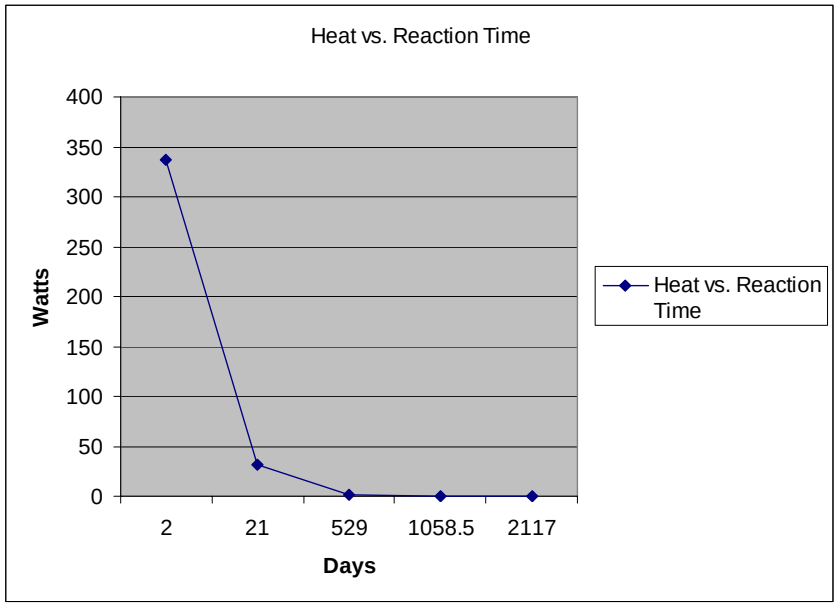

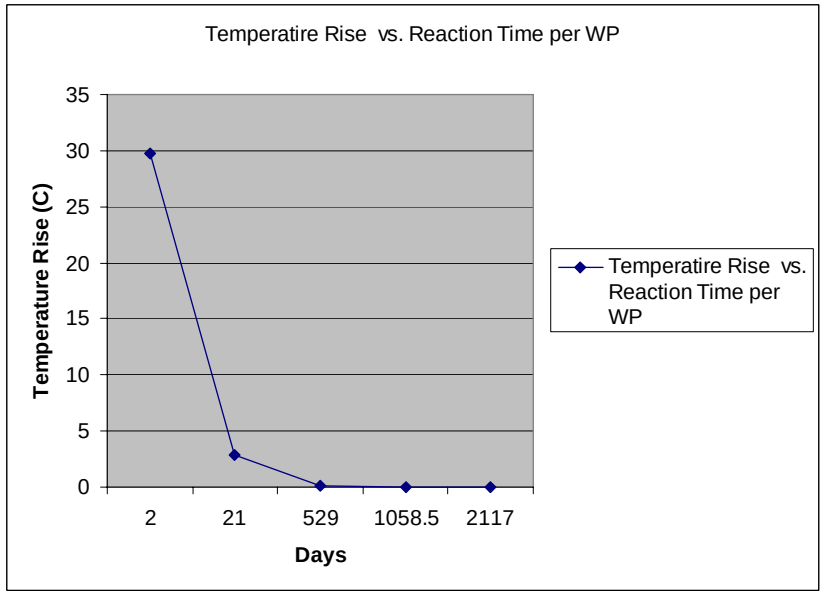

Fermi-1 Blanket Chemical Reactivity Modeling Status

- Modeling software selected and installed
  - COMSOL Multi-physics
  - Installation tests passed
- Validation model in progress
  - Duplicates N-Reactor UH_3 analysis performed with GOTH-SNF
- Preliminary Fermi-1 blanket model (single element) shows low thermal output and low temperature increase due to reaction

EPA Regulation and Standard

- EPA RCRA regulation 40 CFR 261.23 and Orientation Manual contain no measurable definition of reactivity

  "In many cases, there is no reliable test method to evaluate a waste's potential to explode, react violently, or release toxic gas under common handling conditions. Therefore, EPA uses narrative criteria to define most reactive wastes and requires waste generators to use their best judgment in applying the narrative definitions to determine if a waste is sufficiently reactive to be regulated." from EPA RCRA Orientation Manual 2006 page III-23 on the topic of Reactivity

Near Term Activities

- Investigate potential measurable definition of reactivity
  - NFPA 704 Standard System for the Identification of Hazards of Materials for Emergency Response
  - DoD Ammunition and Explosives Hazard classification
- Decision to continue with geochemistry and TSPA analyses 4-08
- Completion of TSPA and geochemistry analyses 9-08

Summary

- Chemical reactivity modeling of Fermi-1 blanket in progress
- Formulation of measurable definition of reactivity in progress
- Decision to move forward with geochemistry and TSPA analyses 4-08
- Complete reactivity modeling and documentation 9-08
- Complete documentation of TSPA and geochemistry analyses 12-08