The MCO and the LA

B.W. Carlsen
National Spent Nuclear Fuel Program
August 27, 2008

Idaho National Laboratory

Background

- ~400 MCOs have been loaded and are currently in interim storage awaiting repository disposal
- Existing analyses and test results demonstrate that MCOs can be safely stored, handled, transported and emplaced in a repository
  - Criticality Safety
    - Hanford MCO Topical Report
    - NSNFP: Criticality Analysis for N-Reactor Fuels in a Rail Transportation Cask
    - YMP Criticality Safety Analyses
  - Chemical Reactivity (potential for pyrophoric reaction and/or pressurization)
    - Hanford MCO Topical Report
    - NSNFP: GOTH/SNF MCO Chemical Reactivity Analysis
  - Breach resistance
    - Hanford MCO Topical Report
    - NSNFP Modeling and drop testing
    - NSNFP Structural Analyses for Transportability of the MCO
  - Consequence of breach (nonmechanistic)
    - YMP Dose Consequence Analyses

MCO Analyses

- Traditional approach relied on codes, consensus standards, and safety margins to preclude unexpected failure
  - Failure rates were not explicitly quantified
  - Empirical data for determining failure rate is sparse
- Quantification of the failure rate was deemed necessary to demonstrate compliance with 10CFR63
- BSC requested LLNL to perform a simplified fragility analysis to estimate failure rates as a function of strain

LLNL Fragility Analyses

- A cumulative distribution function (CDF) was developed to mathematically represent the failure distribution of 204 uni-axial pull tests of annealed 304L tubing
- Significant conservatisms are embedded in analyses
  - Tubing typically fails at lower elongation values than bar and plate
  - CDF is based on tensile testing
  - CDF shifted 8.3% to account for non-annealed steels
  - Imposed a factor of 2 to adjust for potential effects of triaxiality
  - Failure likelihood based on most highly strained element in worst case drop

LLNL Fragility Analysis Results

- Requires MCO peak strains to be less than ~14% in order to demonstrate an event sequence leading to breach is beyond category 2 (i.e. likelihood less than 1E-4)
- Likelihood of breach of an MCO was not found to be sufficiently low
  - Potential remedies were proposed and considered
  - MCO was removed from June 2008 LA submittal
- NSNFP (EM) has been actively working with BSC (RW) to resolve this issue

A New Wrinkle

- Repository scenarios include dropping objects onto the MCO top head
- Former analyses focused primarily on drops impacting the MCO bottom
- The MCO is more vulnerable to impacts on its upper head

Vulnerability for Drop on Top Head

- Peak strains in the upper head had been presumed to occur in the thinnest portion of cap wall where it meets the shell

- In this region, the shell has a threaded collar that mates to the locking ring
  - Connection at threads had not been explicitly modeled
  - If threads disengage laterally, this region could be vulnerable to outward buckling
  - Upper head of MCO <u>may</u> require protection from impacts

MCO Closure Assembly

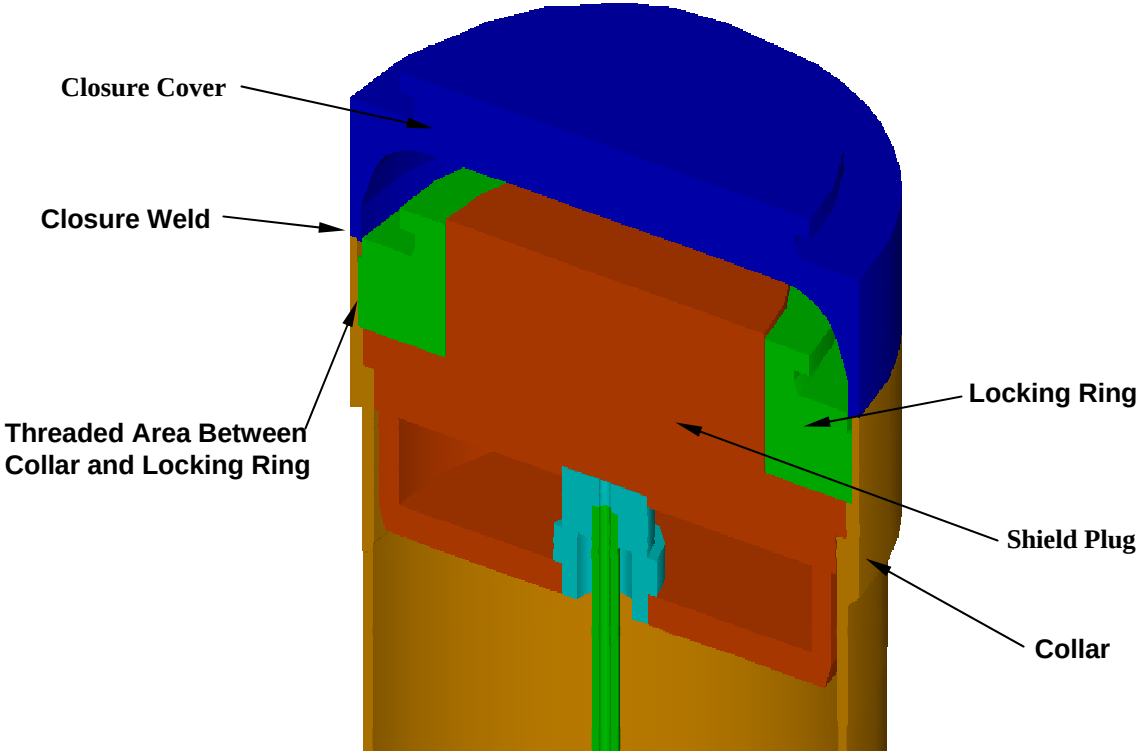

MCO Collar and Locking Ring

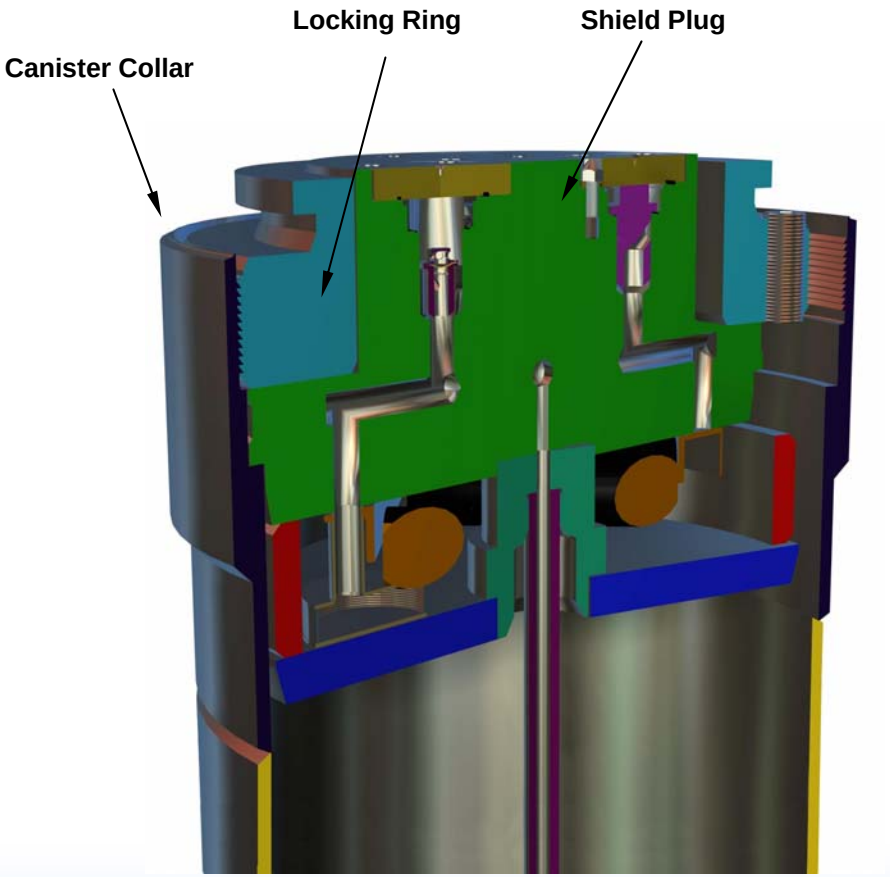

MCO Locking Ring

Vulnerability for Drop on Top Head

- NSNFP structural analysis to evaluate MCO transportability included provision for considering the effects of the threaded connection
- Analysis concluded that, in a transport cask, MCO could survive 10CFR71-specified transportation accident (30' drop onto unyielding surface)
  - HI-STAR 100 used to represent a typical transport cask
  - Credit taken for cask impact limiters and internal impact limiter
  - Minimal credit taken for resistance to outward buckling at threaded connection
  - Maximum calculated strain was 18.8% (failure criterion was 45% -- through wall)
  - Worst case strains did not result from MCO head impacting crush pad but from 12880 lbs of fuel (modeled as a rigid mass) impacting shield plug
    - Analogous scenario to grapple dropping on top head

MCO Transport Model – Missing Basket

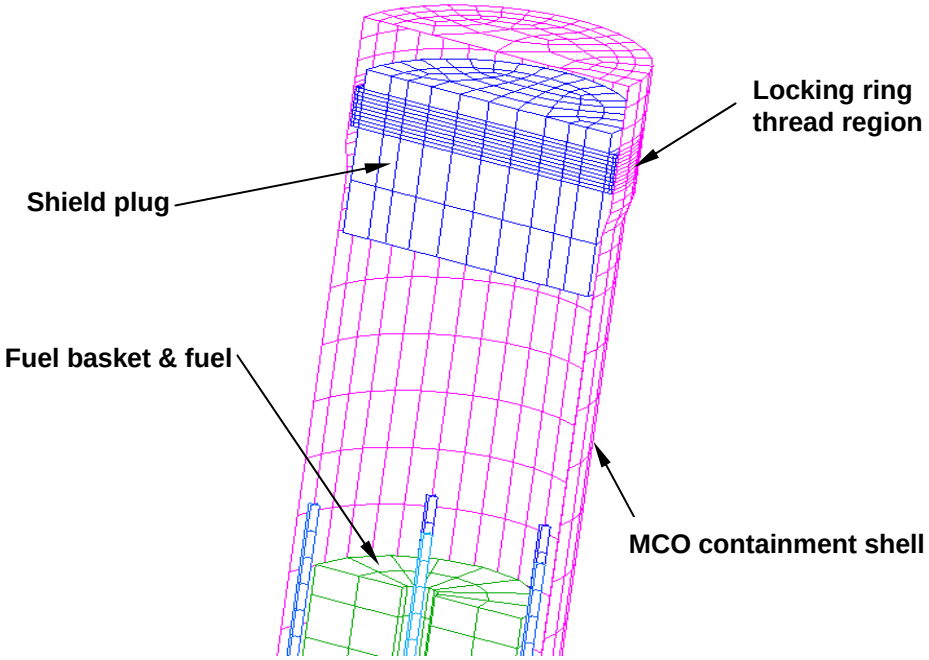

Getting the MCO Back on Track

- Two open issues to be addressed
  - 23-foot off-vertical drop back into cask or into waste package
  - Drops of objects onto the top head of the MCO
- Several potential paths
  - Analytical Solutions
  - Design Solutions
  - Other Solutions

Analytical Solutions

- Additional analysis could demonstrate that the MCO breach is sufficiently unlikely (i.e. BC2)
  - Update fragility curve to reduce excess conservatism
    - Use of MCO specific data and actual test results
    - Use of an average through-wall rather than peak strain
    - Account for multiple failures needed to enable radiological release (strained area is above shield plug seal)
  - Account for distribution of demand curve
    - More accurate treatment of triaxiality
    - Distribution of drop heights, angles, temperatures, loads, etc.
    - Relaxing assumption of impacting a non-yielding surface
- Accident scenarios can be modeled to determine design criteria needed to meet performance requirement

Scoping Analyses – Drops on Upper Head of MCO

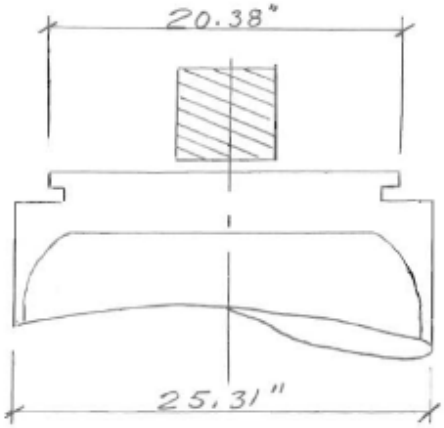

CASES 1, 2

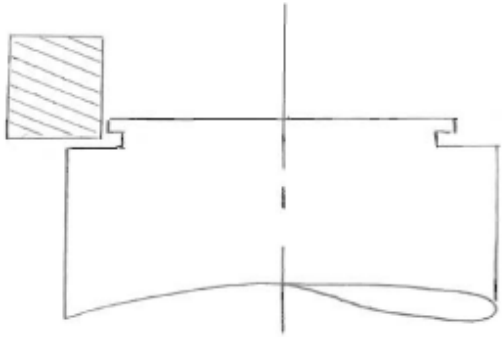

CASES 3, 4

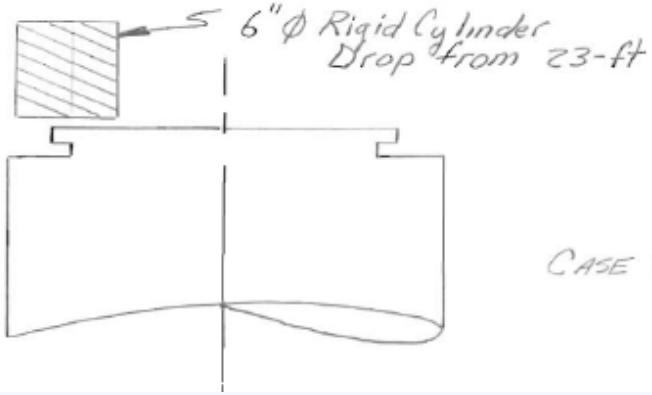

CASE 5

Scoping Analyses – Drops on Upper Head of MCO

6-in Diameter Rigid Cylinder Dropped from 23 Feet	PEEQ Strain	
	Peak	Approx. Ave. (through thickness)
1. 8000-lb onto center of upper head	.18	.11
2. 4000-lb* onto center of upper head	.12	.07
3. 8000-lb onto outer edge	.35	.23
4. 2000-lb onto outer edge	.23	.16
5. 4000-lb onto edge of lifting ring	.26	.18

•No credit taken for pre-load in threads between locking ring and collar
•No credit taken for crush pad beneath MCO
* Actual weight of Hanford grappling fixture is ~4400 lbs.

Case 3: 8000 lb Rigid Body onto Outer Edge (beneath point of impact)

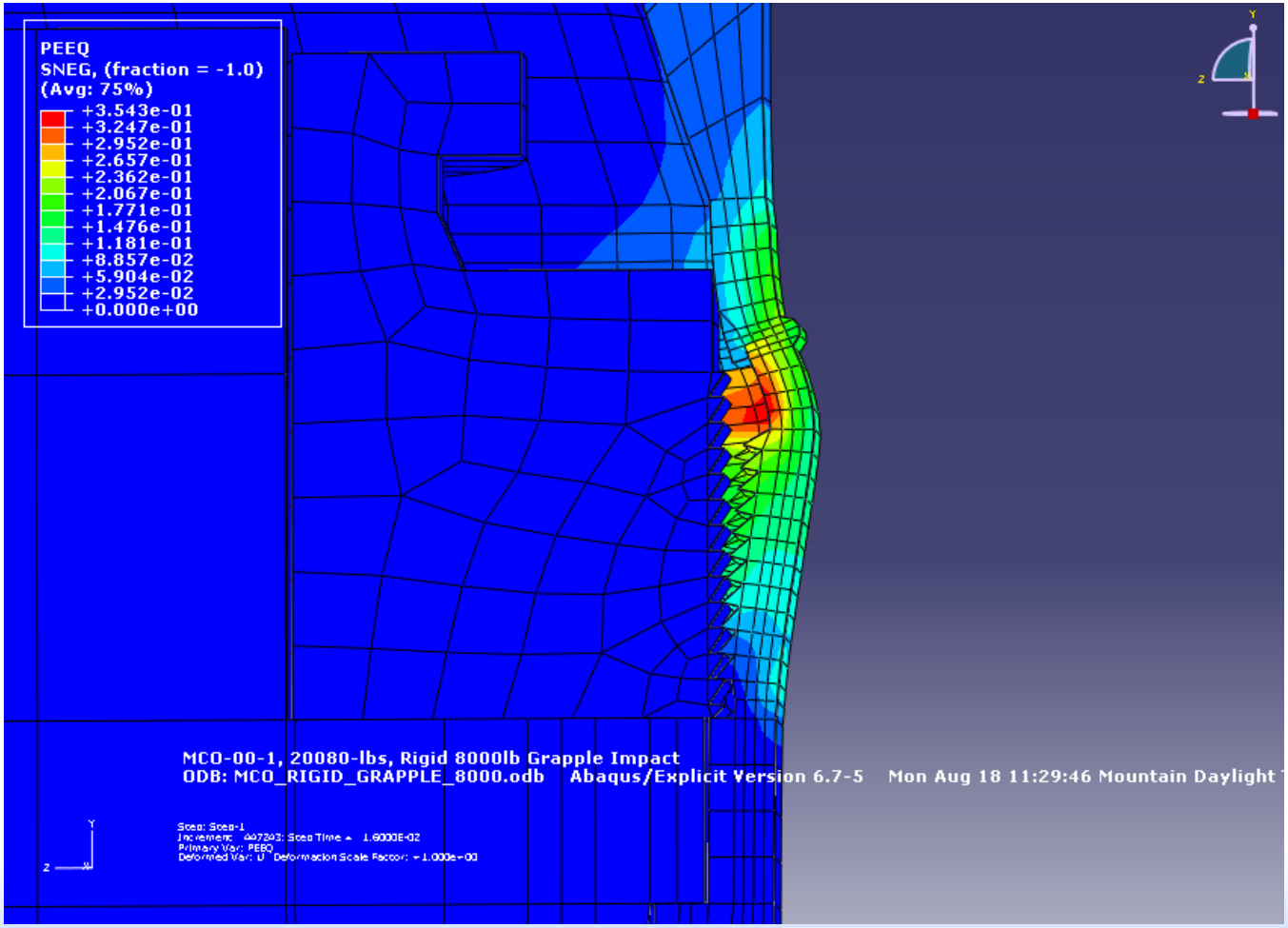

Case 3: 8000 lb Rigid Body onto Outer Edge (90° from point of impact)

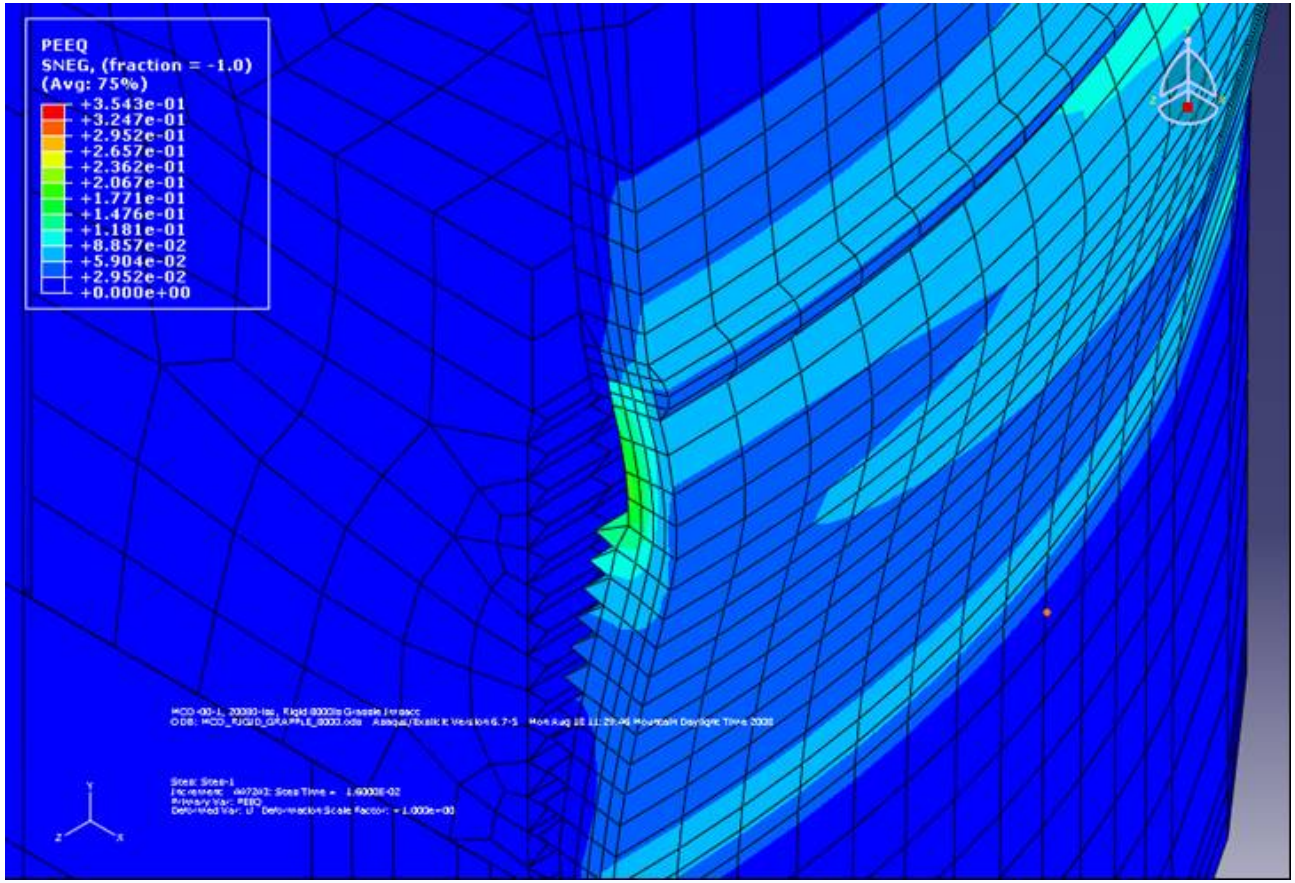

Case 2: 4000 lb Rigid Body onto Center of Cap (beneath point of impact)

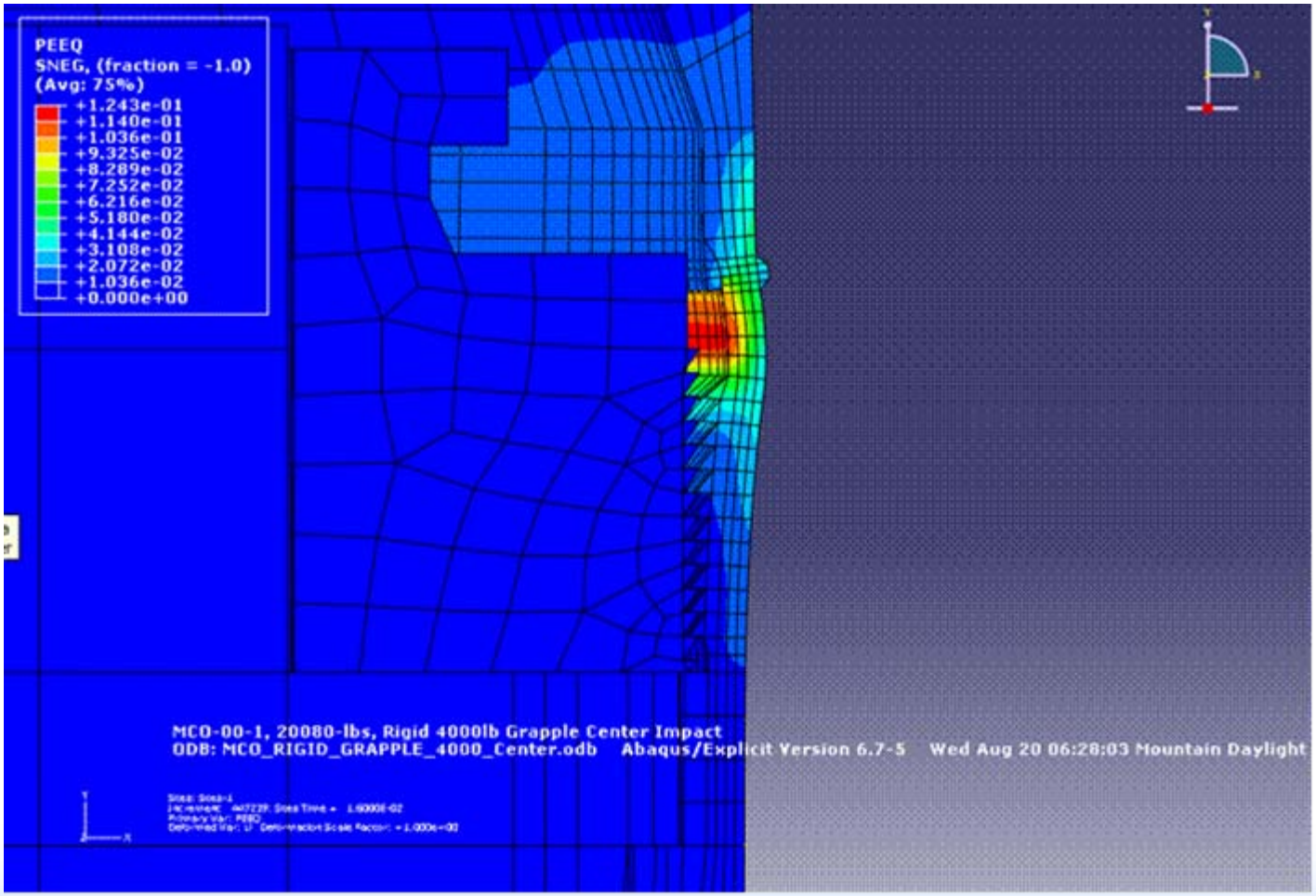

Design Solutions

- YMP facilities and equipment
  - Impact angles can be limited by geometric constraints
  - An indexing plate to cover loaded ports can preclude dropping objects onto top of the MCO …. except for drop of the lifting grapple
  - Impact limiter can be placed in bottom of cask and waste package
- Supplemental structural support for MCO
  - Reinforce vulnerable area with ‘belly band’
  - Absorb energy by extending band above canister top (i.e. impact absorbing skirt)

Impact on Top Head with 'Belly Band' Restraint

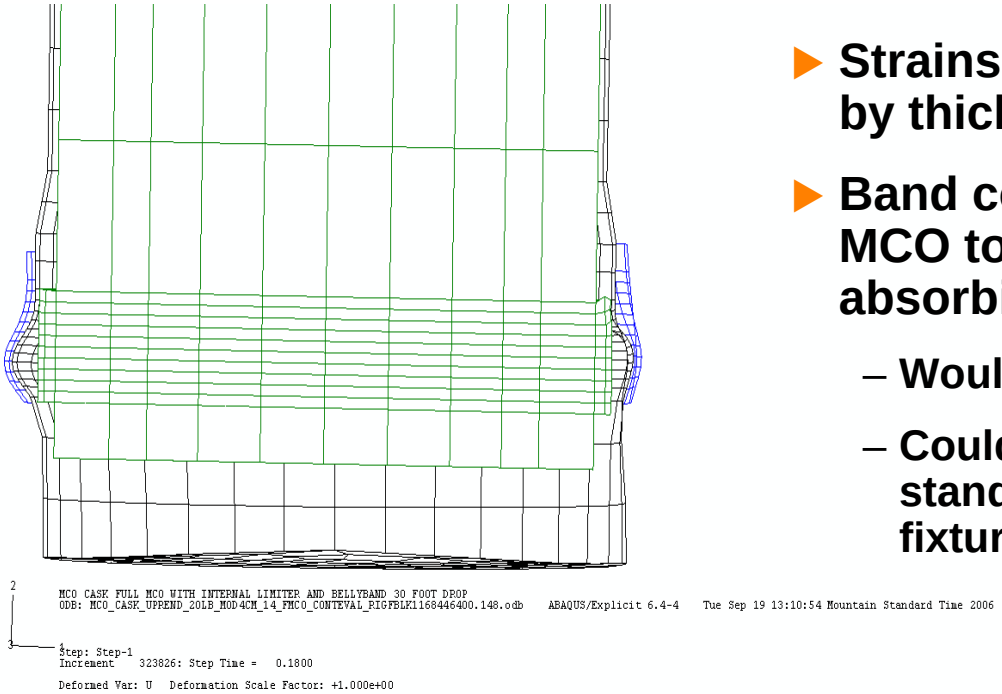

- ¼" x 6" belly band reduced peak strains ~40%
- Strains could be further reduced by thicker band
- Band could be extended above MCO to form an energy absorbing skirt
  - Would interfere with MCO grapple
  - Could design to interface with 24" standardized canister lifting fixture

Other Possible Solutions

- Reduce likelihood and/or height of of dropping grapple
- Transport and dispose of MCO using a TAD-like overpack
- Handle MCOs in the wet handling facility
- Demonstrate that consequences of breach meet allowable dose limit

Considerations for Path Forward

- Costs
- Schedule
- Likelihood of success

Comparison of Options

Approach	Likelihood of Success	Schedule	Cost
Analytical Solutions	High	LA for R&P	<$1 M
Design Solutions (Facility and/or MCO modifications)	High	LA for R&P	~$15 M
Design Solutions (TAD-like overpack)	High	LA for R&P	>$100 M

Recommended Path Forward

- Implement design solutions when needed <u>and</u> cost effective
- Complete analyses to determine the need for design solutions
  - Update fragility analysis to better reflect allowable MCO strains
  - Complete drop scenario analyses to identify MCO performance
- If needed, allocate additional performance requirements to ensure breach of an MCO is beyond category 2 (i.e. likelihood < 1E-4).
  - Surface facility design and operational requirements that reduce drops and/or impacts of drop
  - MCO structural modifications that increase breach resistance