National Spent Nuclear Fuel Program

# *Crediting Leaktightness of DOE SNF Standardized Canister in Transportation Safety Analyses*

**NSNFP Semi-annual Meeting**
**January 24, 2007**

*Providing for safe, efficient transportation of DOE spent nuclear fuel*

# *10CFR 71.55 Requirements*

- *10CFR71.55(b) requires package to remain subcritical under normal transportation loads while flooded*
- *10CFR71.55(e) requires package to remain subcritical under hypothetical accidents while flooded*
  - *To meet these conditions, characterization and structural integrity of the fuel needs to be know*
  - *Performance of the canister internals needs to be known*
- *ISG-19 allows an approach to cover high-burnup, damaged commercial fuel*

# *Meetings with the NRC*

- *Division of Spent Fuel Storage and Transportation*
  - *March 2006 – NRC Phone call*
  - *May 8, 2006 – NEI Conference/Key Biscayne, FL*
  - *June 1, 2006 – NRC Offices/Public Meeting*
  - *December 6, 2006 – NRC Offices/ Public Meeting*
  - *January 18, 2007 – INMM Conference/ Washington, DC*
- *Division of High-Level Waste Repository Safety*
  - *June 16-17, 2006 – INL Tour*

National Spent Nuclear Fuel Program

# *December 6, 2006 NRC Meeting Agenda*

| | |
|---|---|
| *10:00 a.m.* | *Introductions* |
| *10:10 a.m.* | *Meeting Objectives* |
| *10:30 a.m.* | *DOE-EM SNF Canister Integrity* |
| *11:00 a.m.* | *DOE-EM Canister Criticality Safety* |
| *11:15 a.m.* | *Summary and Conclusions* |
| *11:30 a.m.* | *Staff Feedback* |
| *11:45 a.m.* | *Public Comments* |
| *12:00 p.m.* | *Adjourn* |

# *NRC Meeting Objectives*

- *Status progress of topical report and supporting technical efforts*
- *Keep the dialog open*
- *Invite/encourage focused technical meetings*

# *Summary of Staff Comments from June 1, 2006*

- *Technical*
  - *Applicability of modeling to actual fuel loadings*
  - *Temperature effects*
  - *Applicable codes and standards*
- *Procedural*
  - *Specify how this Topical Report will Interface with a C of C Application for a future transportation package*
  - *Succinctly identify what the Topical Report will request the NRC to approve.*
  - *Clarify how 10CFR71.55 requirements will be satisfied.*

# *Interfacing with C of C Application for Future Transportation Package*

- *Cask performance assumptions credited in the canister structural analyses will be clearly specified.*
- *The C of C application must demonstrate that the cask meets the specified performance requirements.*
- *Cask vendor will perform the criticality analyses for the fully loaded cask array.*

# *Scope of Structural Analysis*

- *June 2006 meeting reviewed robust design of DOE-EM Standardized Canister*
- *Since then, we have analyzed the DOE-EM Standardized Canister for the following two loadings:*
  - *An accidental drop from 30 feet onto an essentially unyielding flat surface while within a transportation cask [10 CFR Part 71.73(c)(1)]*
  - *A static external water pressure of 290 psig on the canister surface (10 CFR Part 71.61)*

National Spent Nuclear Fuel Program

# *Temperature Conditions*

*Accidental Drop: 10 CFR Part 71.73 requires ambient air between -20°F and 100°F to create the condition most unfavorable for the canister*

- *Case 1: all canister and basket parts at 70°F (shown valid for -20°F to 100°F range)*
- *Case 2: all canister and basket parts at 600°F (enveloping operating temperature during transportation)*

*Water Immersion: all canister components at 70°F*

# *Standardized Canister and Basket Loading*

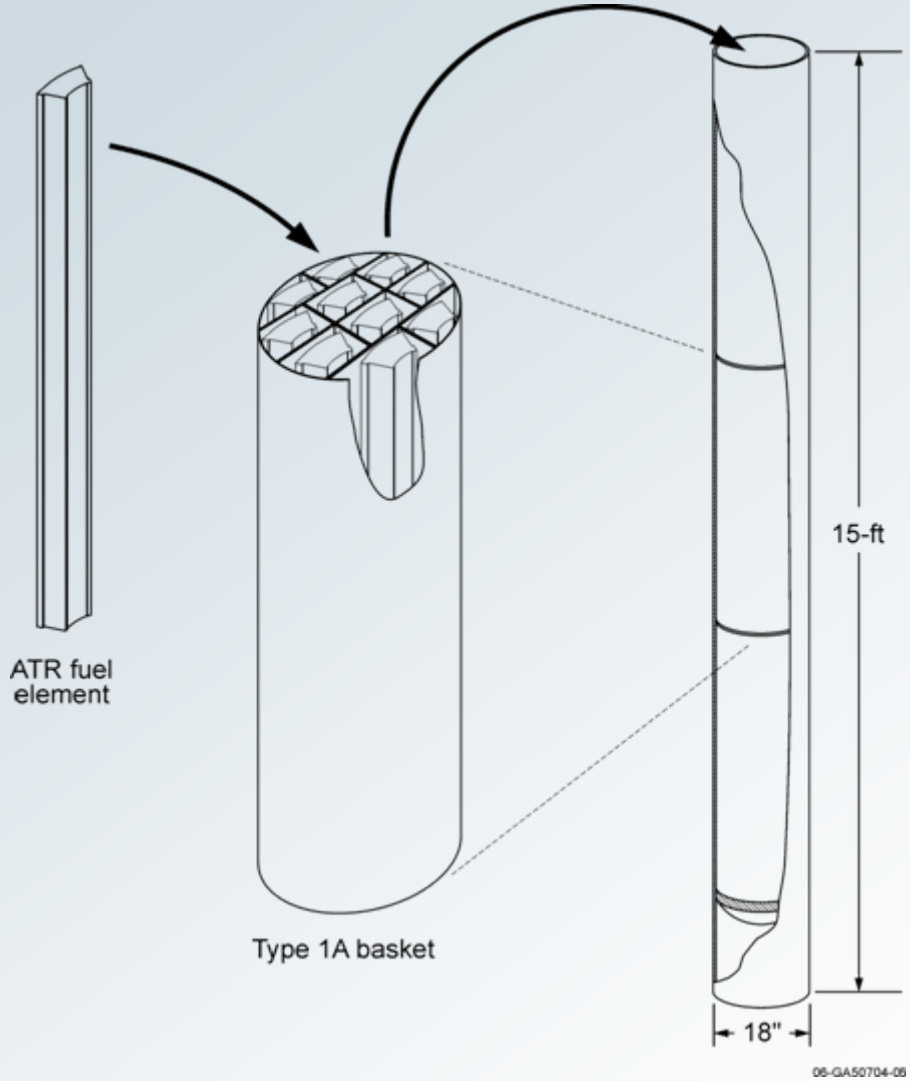


National Spent Nuclear Fuel Program

# *Finite Element Model*

*Number of Finite Elements Per Component or Assembly:*

- *28,784 for canister assembly (shell, heads, skirts, internal impact plates)*
- *34,512 for three Type 1a baskets*
- *204 for fuel elements*
- *5,060 for shield plug*

*(1 plane of symmetry used)*

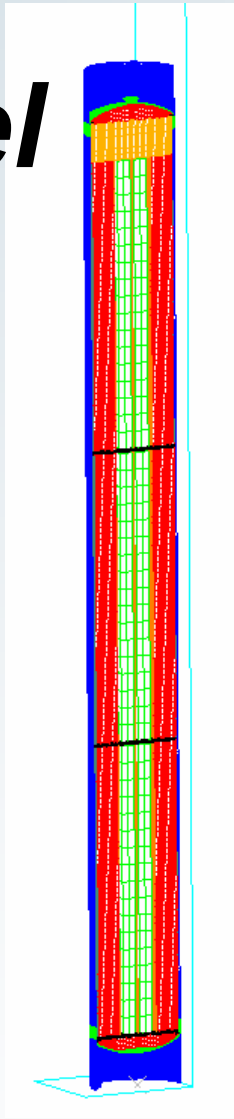

# *Analytical Drop Results*

*Canister 70°F (-20°F to 100°F) Drop Results*

- *Maximum strains in the canister of 7% outside surface, 3% middle surface, and 8% inside surface were well below the minimum elongation values (40% heads, 35% and 25% for the main shell*
- *Maximum strains were also well below the 1999 prototype canister maximum strains (57%, 19%, 42%), which showed post-drop helium leaktight condition*
- *Canister remains leak-tight during accidental drop event within the transportation cask*

# *Analytical Drop Results (Cont.)*

*Canister 600°F Drop Results*

- *Maximum strains in canister of 8% outside surface, 5% middle surface, and 8% inside surface were below the uniform strain limit of 20%*
- *Canister remains leak-tight during accidental drop event within the transportation cask*

National Spent Nuclear Fuel Program

# *Water Immersion Results*

*Under a 290 psig external pressure, the canister responded as follows:*

- *Minimum theoretical pressure required to buckle the canister was calculated at 440 psig*
- *Maximum stress in the canister of 23.1 ksi was below the ASME Code minimum specified yield strength (25 ksi)*
- *Canister containment material remained elastic during this external pressure application*
- *Water leak-tight condition is maintained*

# *Recently Completed Work*

- *18-inch diameter, 15-foot long canister being evaluated for the maximum design weight of 6000 pounds with one and three Type 1a baskets*
- *18-inch diameter, 15-foot long canister being evaluated for the minimum expected weight with one Type 1a basket*
- *18-inch diameter, 10-foot long canister being evaluated for the maximum design weight of 5005 pounds with three Type 1a baskets*

National Spent Nuclear Fuel Program

# *Potential Sources of Damage to the DOE Canister*

- *Corrosion*
  - *General Corrosion*
  - *Galvanic corrosion*
  - *Stress corrosion cracking*
- *Gas Pressurization*
  - *Fission Gases*
  - *Hydrogen gas*
- *Metal Embrittlement*
  - *Hydrogen embrittlement*
  - *Liquid metal embrittlement*
  - *Radiation embrittlement*

# *Bases for Materials Interaction Evaluation*

- *Water is the bad actor*
- *Canister material is 316L*
- *Storage period is limited to 50 years and storage conditions are controlled.*
- *Canister material loss of .047" is acceptable.*
- *Canister pressure limit is 50 psig.*
- *A monitoring and sampling program will be implemented.*

National Spent Nuclear Fuel Program

# *Monitoring and Sampling*

- *Will validate conditions within selected canisters*
  - *Pressure*
    - *Total pressure increase < 5 psi*
  - *Gas Composition*
    - *Confirm low partial pressures of hydrogen, oxygen and water within canister*
  - *Temperature*
    - *Relate temperature and pressure of gases*

National Spent Nuclear Fuel Program

# *Overview of Criticality Analysis*

- *Analyses bound all spent nuclear fuels packaged in the Standardized Canister using the Type 1a basket*
- *ATR spent nuclear fuel establishes the boundary*
- *Standardized Canister provides moderator exclusion for criticality analysis*
- *Single Standardized Canister analyses*
  - *Extensive analyses with varying geometries*
  - *Degraded fuel in a cylinder geometry provides bounding case*
- *Analyses of a close-packed array*

# *Analysis Assumptions*

- *Each loaded Standardized Canister is treated as a closed system*
  - *Beginning-of-life fissile content*
  - *Fixed canister volume*
- *ATR fuel represents maximum total fissile mass*
- *Analyses assume 11 vol % water*

# *Analysis Assumptions (continued)*

- *Loss of geometry*
  - *All fuel rubblized and retained within the Standardized Canister*
  - *Vertical Standardized Canister orientation represents most reactive system due to axial reconfiguration*
- *Effects of neutron poisons minimized*

# Fuel Rubblization Forming a Cylinder

- 30 ATR fuel assemblies rubblized
- Standardized Canister is fully water reflected
- 11 vol% water saturation of fuel matrix

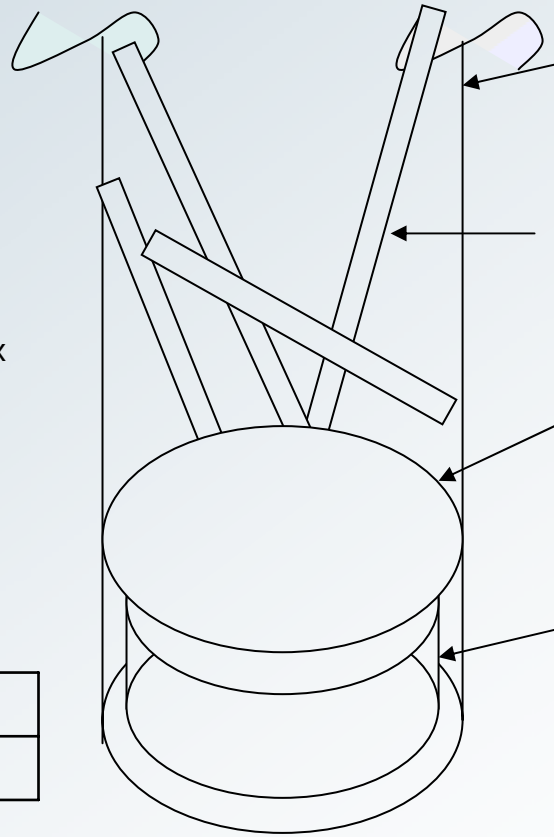


| *Configuration* | $k_{eff}$ |
|---|---|
| ***cylinder w/ 11% $H_2O$*** | ***0.6249*** |

**(This configuration analyzed in subsequent 9-pack inside a transport cask)**

National Spent Nuclear Fuel Program

# *Flooded transport cask with nine Standardized Canisters*

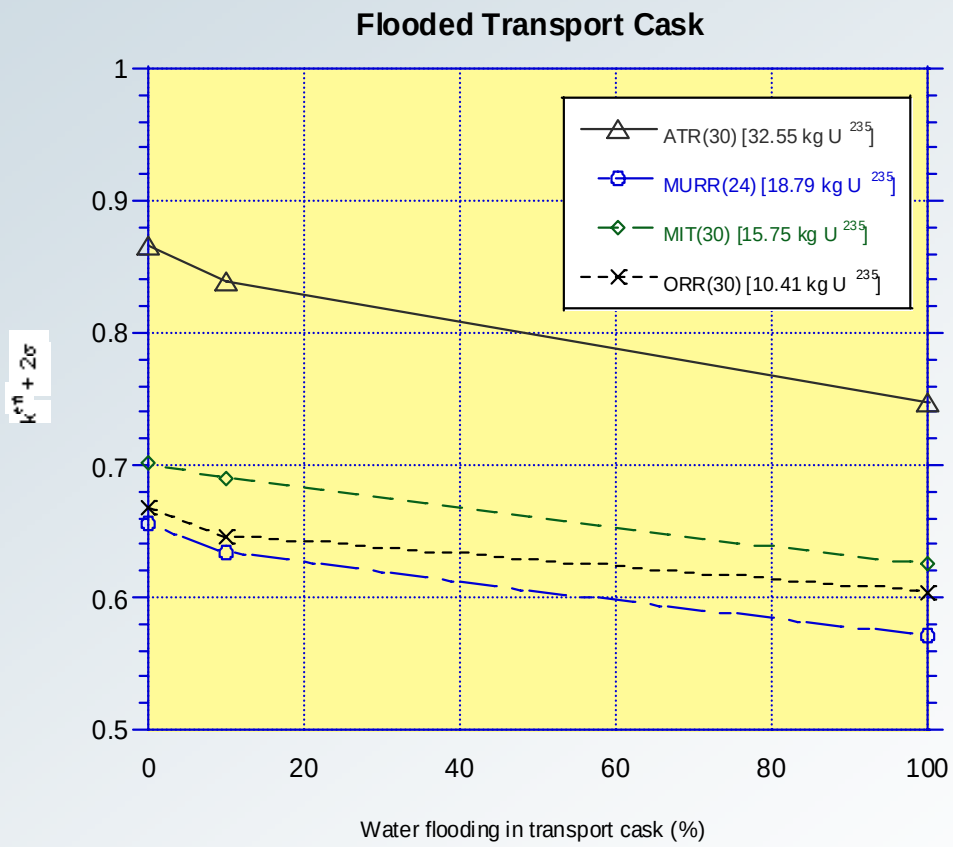


National Spent Nuclear Fuel Program

# *Criticality Safety Approach for DOE SNF*

- *Canisters will remain leak-tight during normal and hypothetical accident conditions.*
- *In the absence of moderator intrusion into the canister, criticality is not credible.*

# *Results from the December 6 NRC Meeting*

- *Very positive response from SFS&T management*
- *Staff better informed on the request being made by the NSNFP*
- *Staff position on moderator exclusion is not uniform*
- *Staff is ready to review the technical documentation the NSNFP has prepared*
- *Discussion on regulatory process is next meeting but not to exclude technical presentations*

# *Guidance from SFS&T*

- *Deliver a quality application to the NRC, the first time*
- *Use pre-application meetings to develop common understanding and consensus of the regulatory path*
- *Avoid managing by exception*
- *Build on risk informed analysis of the DOE canisters*

# *Guidance from SFS&T (cont'd)*

- *Staff position paper on moderator exclusion is being routed through SFS&T (Brach has not seen yet)*
- *NRC staff presenting moderator exclusion to ACNW February 15, 2007*
- *Encouraged to present industry position to ACNW (requested – may be February or March)*

National Spent Nuclear Fuel Program

# *Topical Report Next Steps*

- *Completed criticality and structural analysis (including draft topical report) on 18”x15’ standard canister with aluminum plate fuels*
- *Criticality and structural analysis for type 1a basket (multiple fuels) – February 28, 2007*
- *Topical report on standardized canister with type 1a basket – April 30, 2007*
- *Initial topical report meeting with NRC to obtain approval by FY 2009*