High Level Waste (Calcine) Disposition Project

Current Status and Path Forward

Presented By: ***Jan Hagers***
Project Manager

August 8, 2007

Need for Calcine Disposition Project

Environmental Management (EM) has identified a need to establish the Calcine Disposition Project to disposition high level waste (HLW) calcine including characterization, retrieval, treatment (if necessary), packaging, and onsite interim storage pending shipment to a geologic repository or offsite interim storage facility.

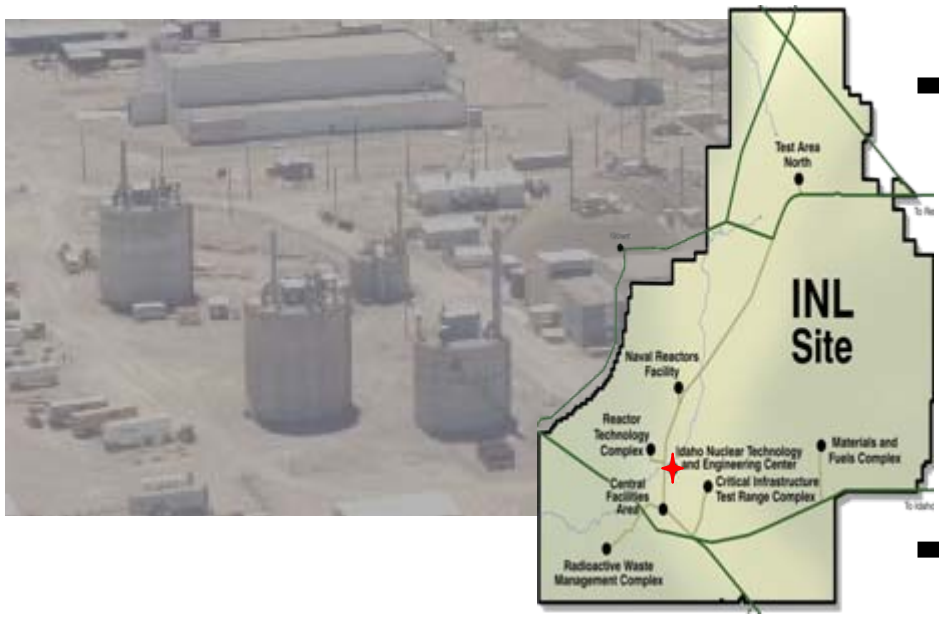

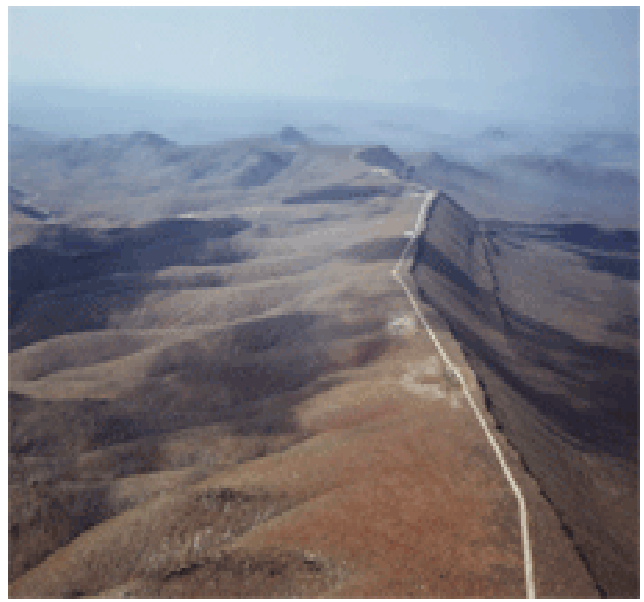

Calcine Particulars

- ***Calcine is HLW by source-based definition***
  - Byproduct of reprocessing (ended in 1992)
  - Also classified as mixed waste regulated under the Resource Conservation and Recovery Act (RCRA)

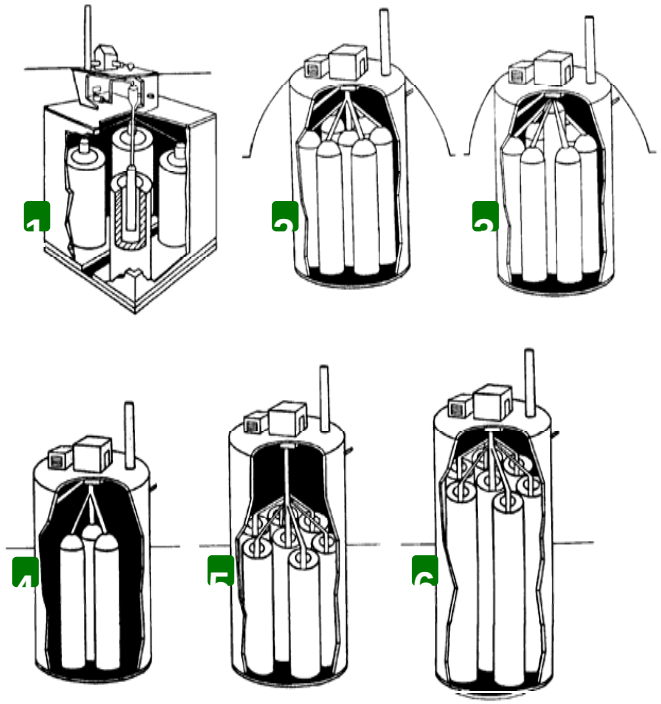

- ***7 to 1 volume reduction through calcination***
  - 8-9M gallons acidic liquid converted to 4400 cubic meters of solid calcine
  - Contains roughly 44 metric tons heavy metal
  - Stored in 43 shielded bins in 6 binsets with one spare (7th set)
    - *Designed for 500 year service life*
    - *Currently being inspected under permit*

- ***Calcine is granular, abrasive, hydroscopic***
  - Particulate size similar to laundry detergent

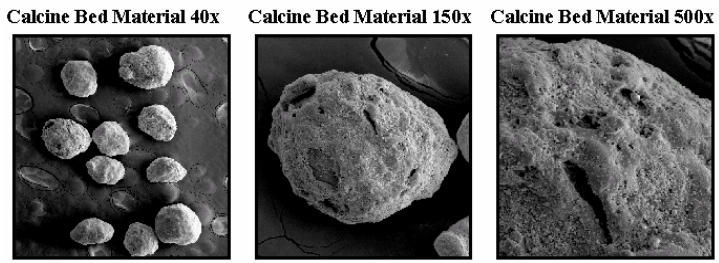

Calcine Disposition Project Drivers

- ***Meet Idaho Settlement Agreement (SA) milestones***
  - Issue a **Record of Decision (ROD) by December 31, 2009** to identify method to treat calcine (if necessary)
    - *Dual path ROD will also carry forward both a treatment and the direct disposal option*
  - Submit a **RCRA Part B Permit application by December 1, 2012** to the state of Idaho for retrieval and treatment (includes packaging)
  - Have all **calcine ready for transport out of the state of Idaho by a target date of December 31, 2035**

- ***Meet Idaho Site Treatment Plan (STP) milestones***
  - Approval of **CD-0 by June 30, 2007**
    - *Approved June 29, 2007 by Deputy Secretary Clay Sell*
  - Approval of **CD-1 by March 31, 2008**
    - *Plan to request 18 month extension*
  - Submit an **enforceable schedule** for disposition of calcine (including design, construction, and start of operations) **by June 30, 2010**

- ***Prepare Calcine for disposal in the Repository as required by the Nuclear Waste Policy Act***

- ***Fulfill commitments in 2005 ROD from the Idaho HLW and Facilities Disposition Environmental Impact Statement (EIS) - DOE/EIS-0287***

Project Status

- ***Demonstrated pneumatic retrieval with cold calcine***
- ***Down-selected to 3 treatment technology options as alternatives to direct disposal***
- ***Canister Modeling & Selection for direct disposal option completed***
- ***Detailed calcine characterization has been completed***
  - Process models, legacy sample analysis, thermodynamic computer modeling
- ***Groundwater modeling and Land Disposal Restriction evaluations***
  - Untreated Calcine disposal at the Repository will meet Total System Performance Assessment (TSPA) for both radioactive and chemical (RCRA) constituents
  - New EPA radiation standard for groundwater has no expected impact on modeling
- ***Obtained 10-year RCRA permit for current storage (November 9, 2006)***
- ***Energy Systems Acquisition Advisory Board held May 11, 2007***
  - Critical Decision 0 (Mission Need) approved June 29, 2007
- ***Closely following Repository and regulatory developments***
  - Need to petition EPA for conditional exemption of calcine from regulatory definition of hazardous waste and exemption from prohibitions on land disposal
    - *Update November 2004 draft petition when repository models are frozen*
    - *Engage EPA in preliminary discussions as appropriate*
    - *Submit draft application to DOE-HQ for review (in parallel with finalization)*
    - *Submit petition to EPA in following repository license application submittal to NRC*

Calcine Disposition Project Dual Path Approach

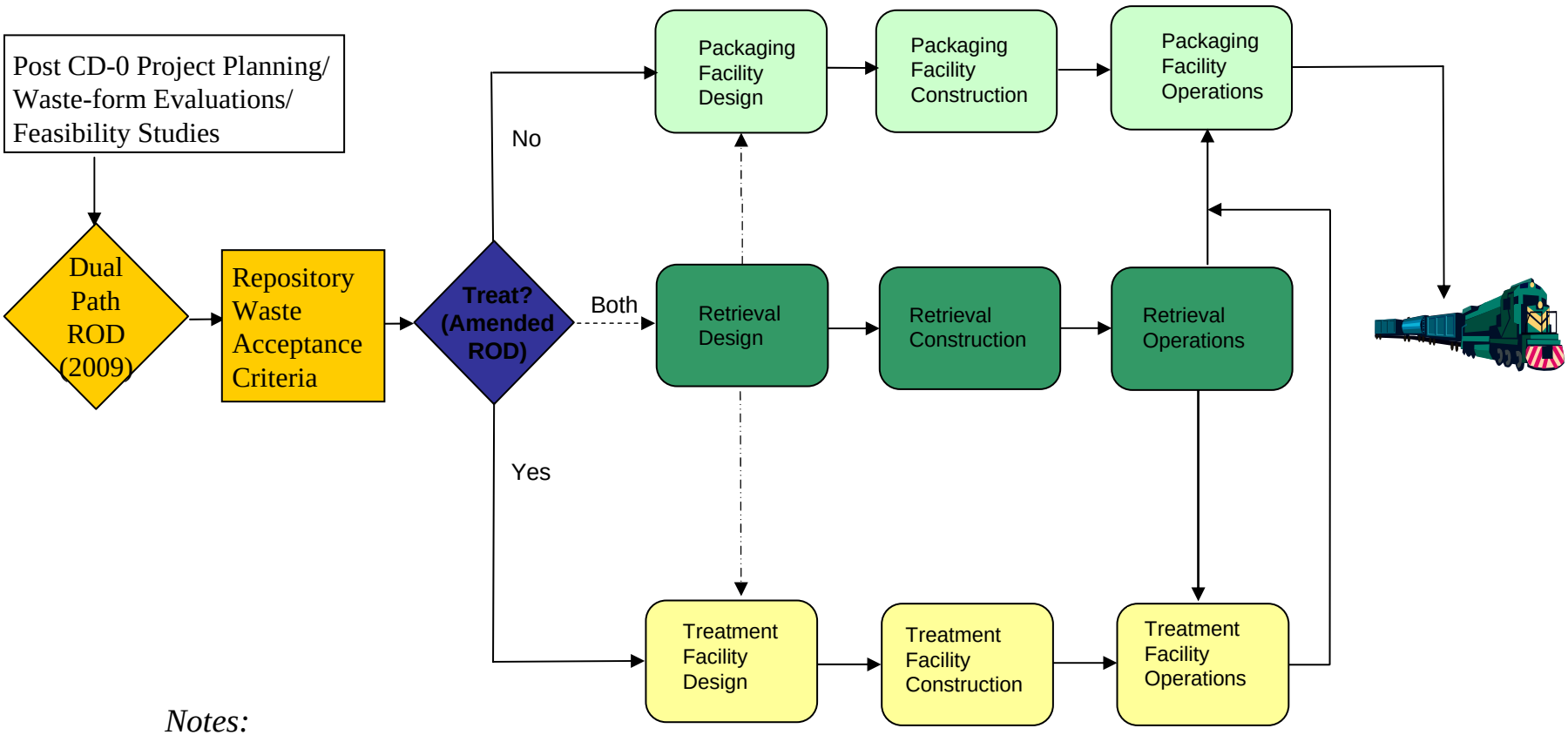

Notes:

(1) Repository Waste Acceptance Criteria factors in RCRA compliance and waste-form performance

(2) Project will re-use the Integrated Waste Treatment Unit to the maximum extent practicable upon completion of the Sodium Bearing Waste Project mission

Direct Disposal Option (Retrieve and Package Without Treatment)

- Retained as one of the dual path options (lowest project cost, shortest schedule)
- Meets Repository performance criteria, but EPA petition approval or legislation necessary to meet regulatory requirements
- 6,600 canisters – granular waste form

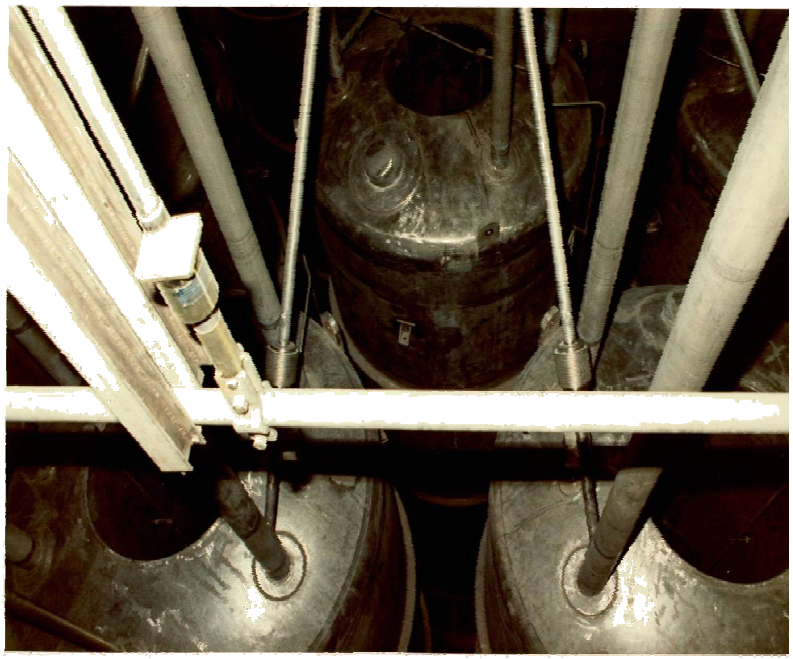

Top view of CSSF #6 bins

ASME Spent Fuel Canister

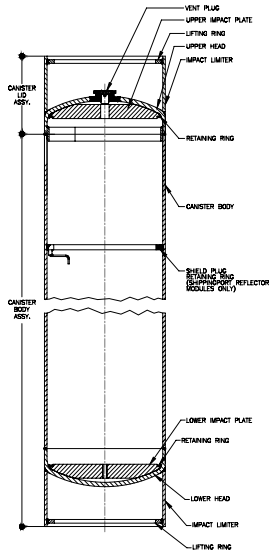

- **ASME B&PV Code, Section III, Division 1, Subsection NB (with Code Case N 595-2)**
- **Constructed of 316L stainless steel**
- **Full penetration closure weld, ultrasonic & liquid penetrant NDE**
- **Sizes**
  - 18 inch diameter, 10 or 15 ft long
  - 24 inch diameter, 10 or 15 ft long
- **Designed for Transport and Storage at a National Repository**

Foster Wheeler Environmental Corporation

Steam Reforming Treatment Option

- Re-uses major portions of Integrated Waste Treatment Unit
- Requires dissolving calcine in nitric acid
- Moderate to high regulatory risk –granular waste form
- Highest technical challenge –minimum of 6,600 canisters (likely 2 to 3 times more)

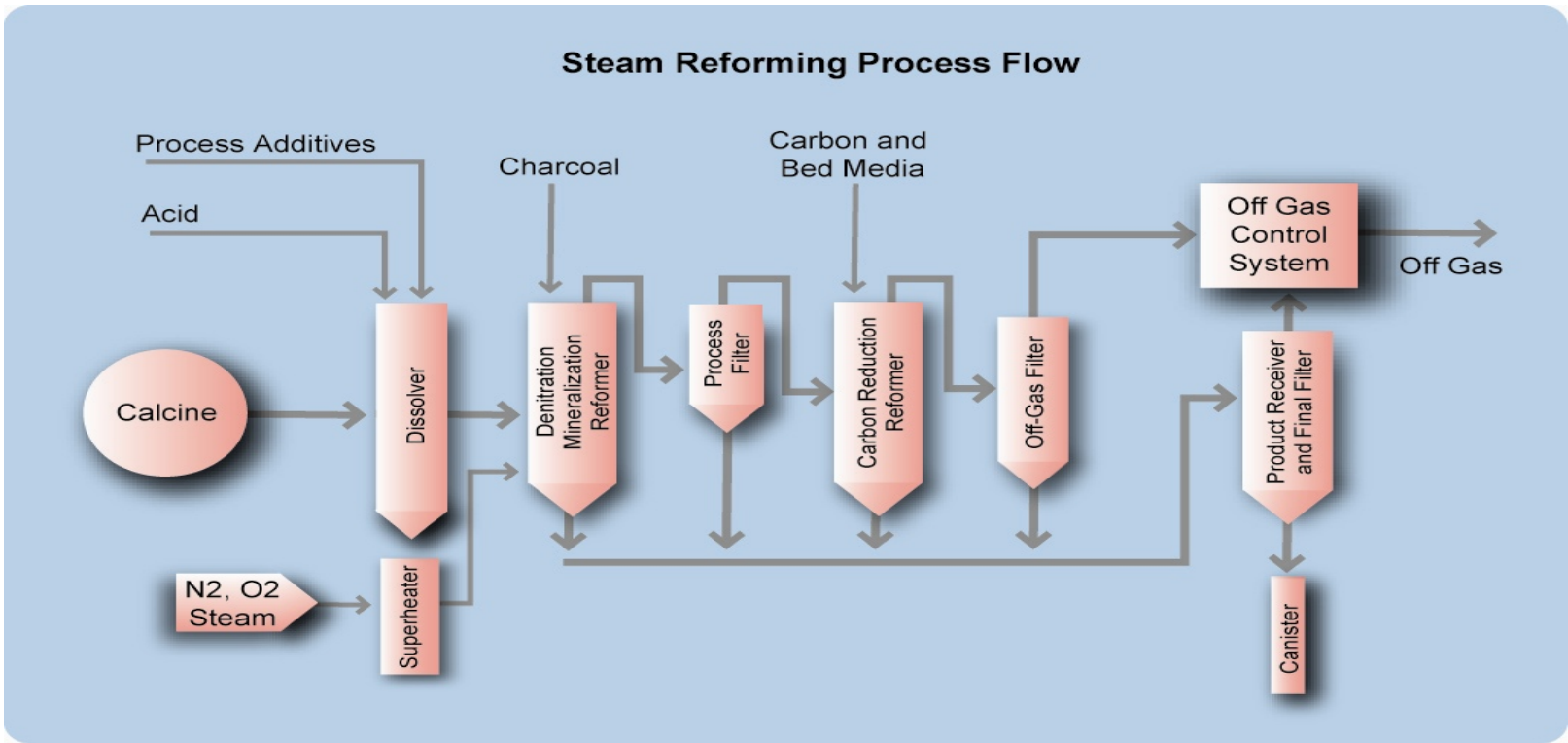

Hot Isostatic Pressing (HIP) Treatment Option

- Significant volume reduction resulting in 3,300 - 4,400 canisters
- Moderate regulatory risk, high pressure and temperature – monolithic waste form
- May be most cost effective option on a total life cycle cost (through disposal) basis
- May be able to retrofit IWTU to support this process
- Residual facility could support varied future missions

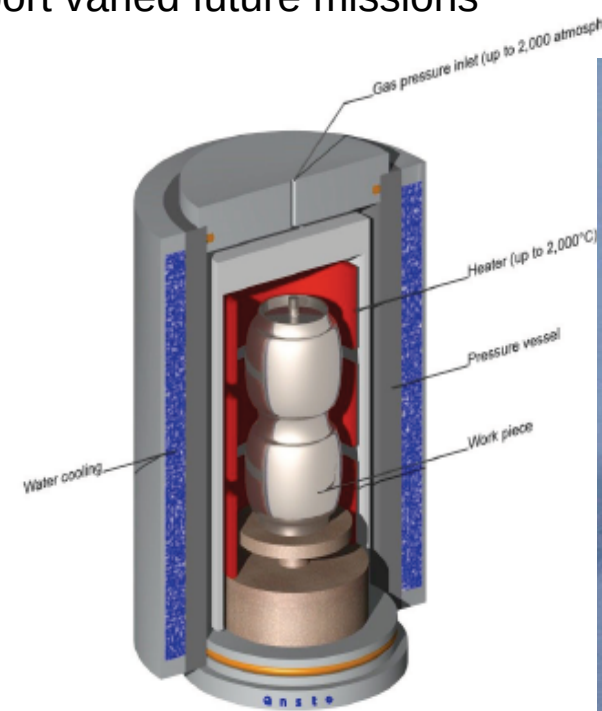

Direct Vitrification Treatment Option

- Borosilicate glass, - EPA and state of Idaho preferred waste form
- Lowest regulatory risk – ~11,200 canisters – monolithic waste form – highest cost, longest schedule

Defense Waste Processing Facility @ SRS

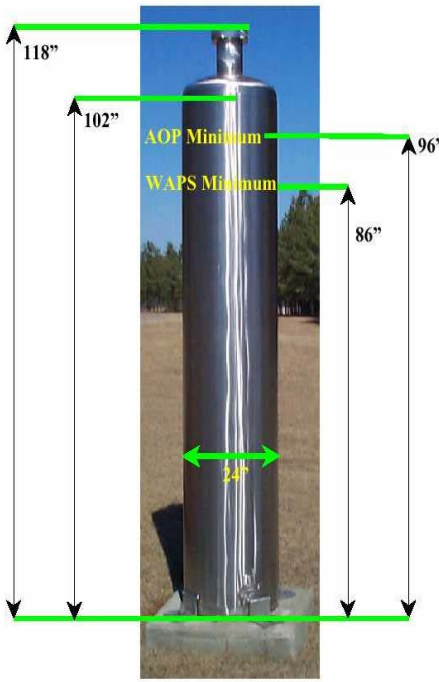

Filled Canister

Materials:	304L Stainless Steel
Empty Weight:	1150 lbs.
Glass Weight:	3800 lbs.

Further Evaluation of HIP Option Appears Warranted

Consolidation:	HIP	Vitrification (JHM)
Matrix:	glass-ceramic	borosilicate glass
Waste loading:	**60-90%**	**20-35%**
Durability (PCT-B):	10-100 x EA glass	10 x EA glass
Final volume: (relative to untreated calcine)	**15-45% reduction**	**100+% increase**
Temp:	2200°F	2100°F
Pressure:	4500 psi	atmospheric
Off-gas:	none	medium-high
Facility		
Future Mission Flexibility:	diverse/flexible	extremely limited/inflexible

Cold calcine in glass-ceramic matrix

Direct SBW compaction (no additives)

Independent Life Cycle Cost Estimate Results *

Treatment Technology (project contingency)	Retrieve, Process, Store (1), D&D	Estimate Number of 10' Canisters	Repository Disposal Charge (2)	Shipping Costs (3)	Total Estimated Life-Cycle Cost (4)
Direct Disposal (40%)	$2.319B	6,660	$4.129B	$0.393B	$6.841B
Direct Vitrification (50%)	$16.307B	11,200	$6.944B	$0.661B	$23.912B
Steam Reforming (60%)	$5.679B	6,660 *(could be 2X+)*	$4.129B	$0.393B	$10.201B
Hot Isostatic Pressing (50%)	$13.324B *(ANSTO $4B+)*	3,300 *(up to 4,400)*	$2.046B	$0.195B	$15.565B *(ANSTO $6B+)*

*** 85% confidence level and 2006$s**

Notes:

(1) Cost estimate does not include storage cost beyond reuse of limited IWTU storage
(2) Repository disposal charge (@ $620K per canister)
(3) Shipping cost will not accrue to EM (@$59K per canister)
(4) Total estimated cost impact to DOE (2006 $'s)
(5) Differing professional opinions from ICE Report

Independent Cost Estimate (Calcine Disposition Project Only)

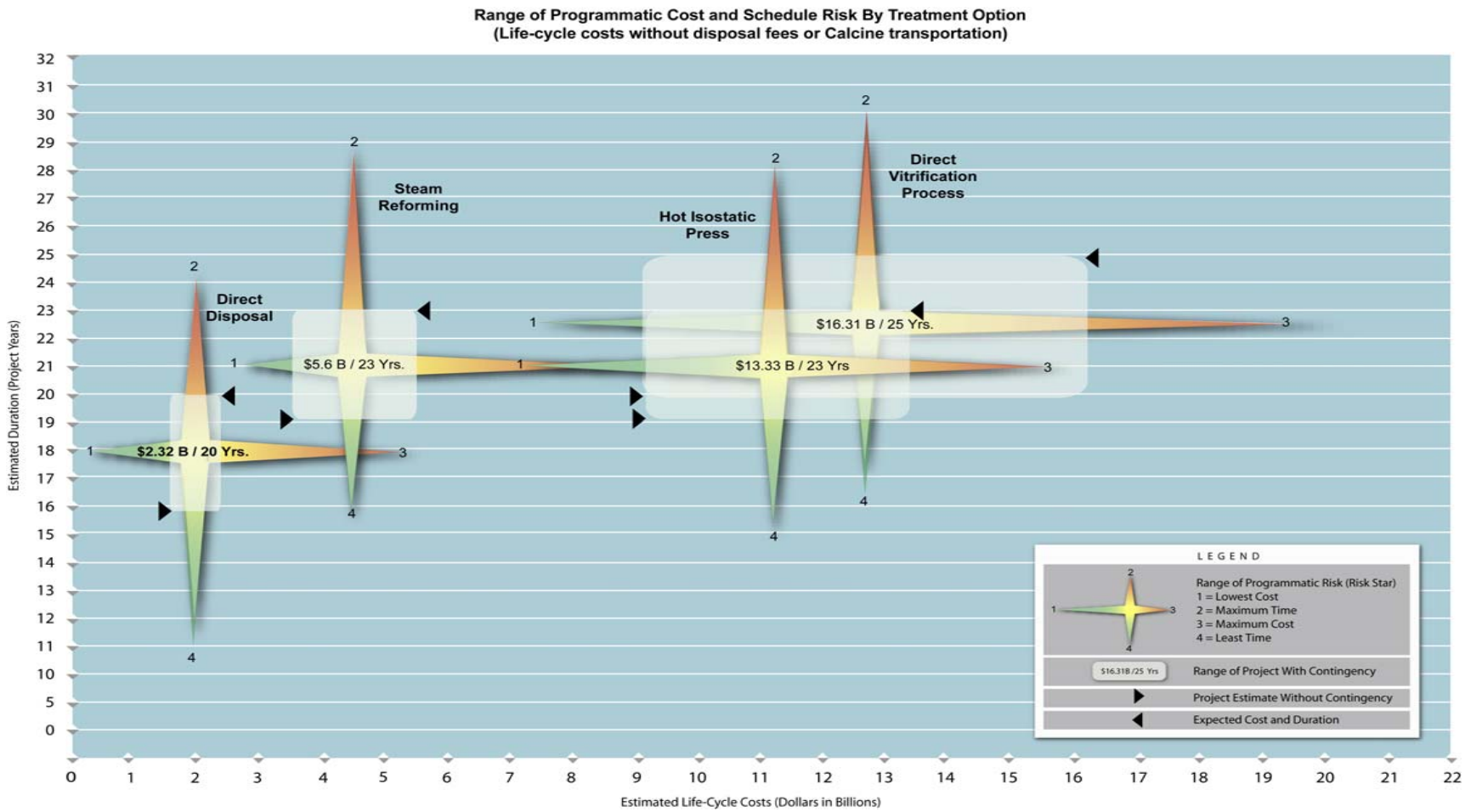

Cost/Schedule Risk Profiles for Four Approaches (CDP only)

Independent Life Cycle Cost Estimate (Through Disposal)

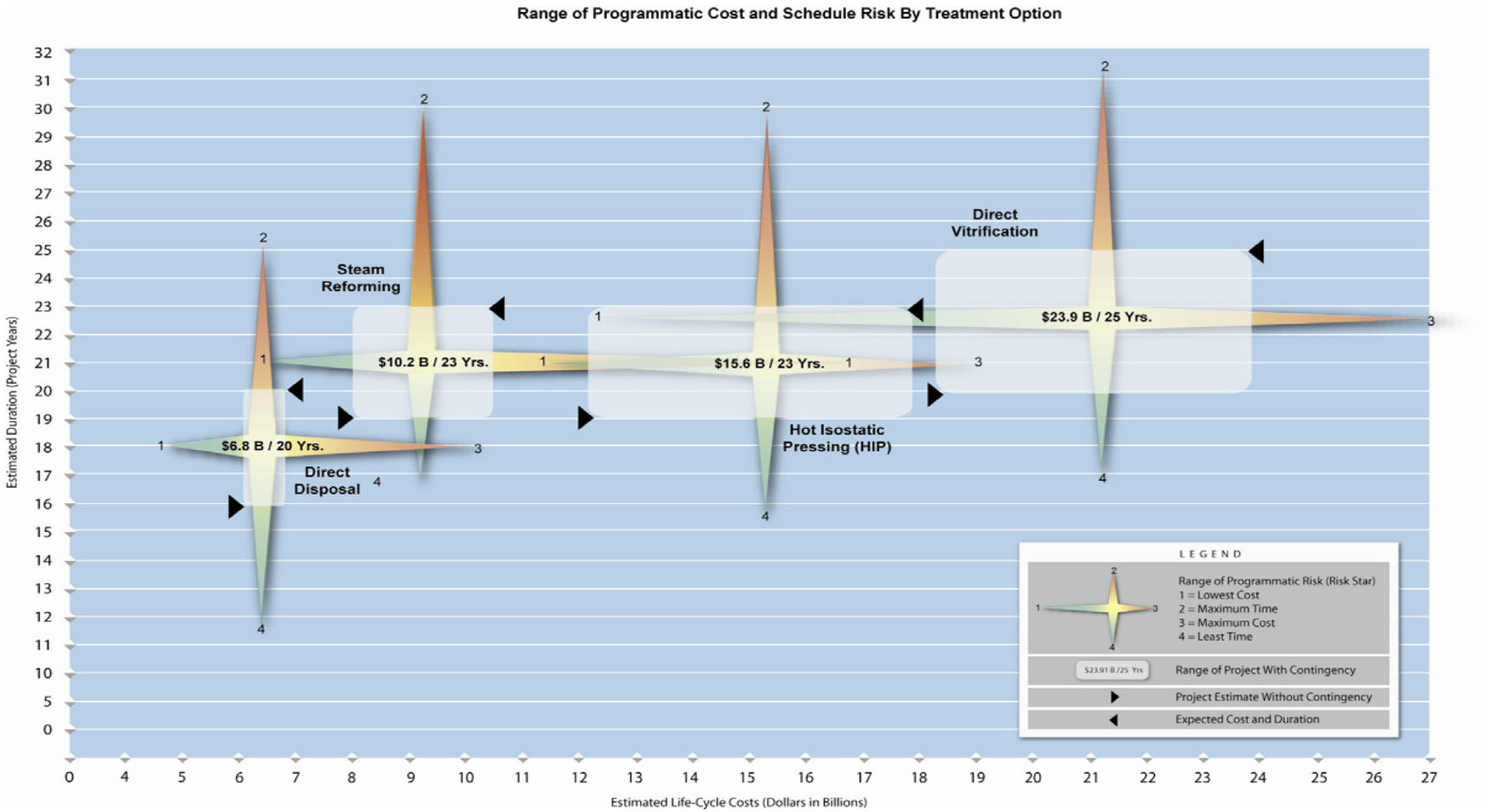

Cost/Schedule Risk Profiles for Four Approaches (through disposal)

Critical Path – Regulatory and Treatment Driven

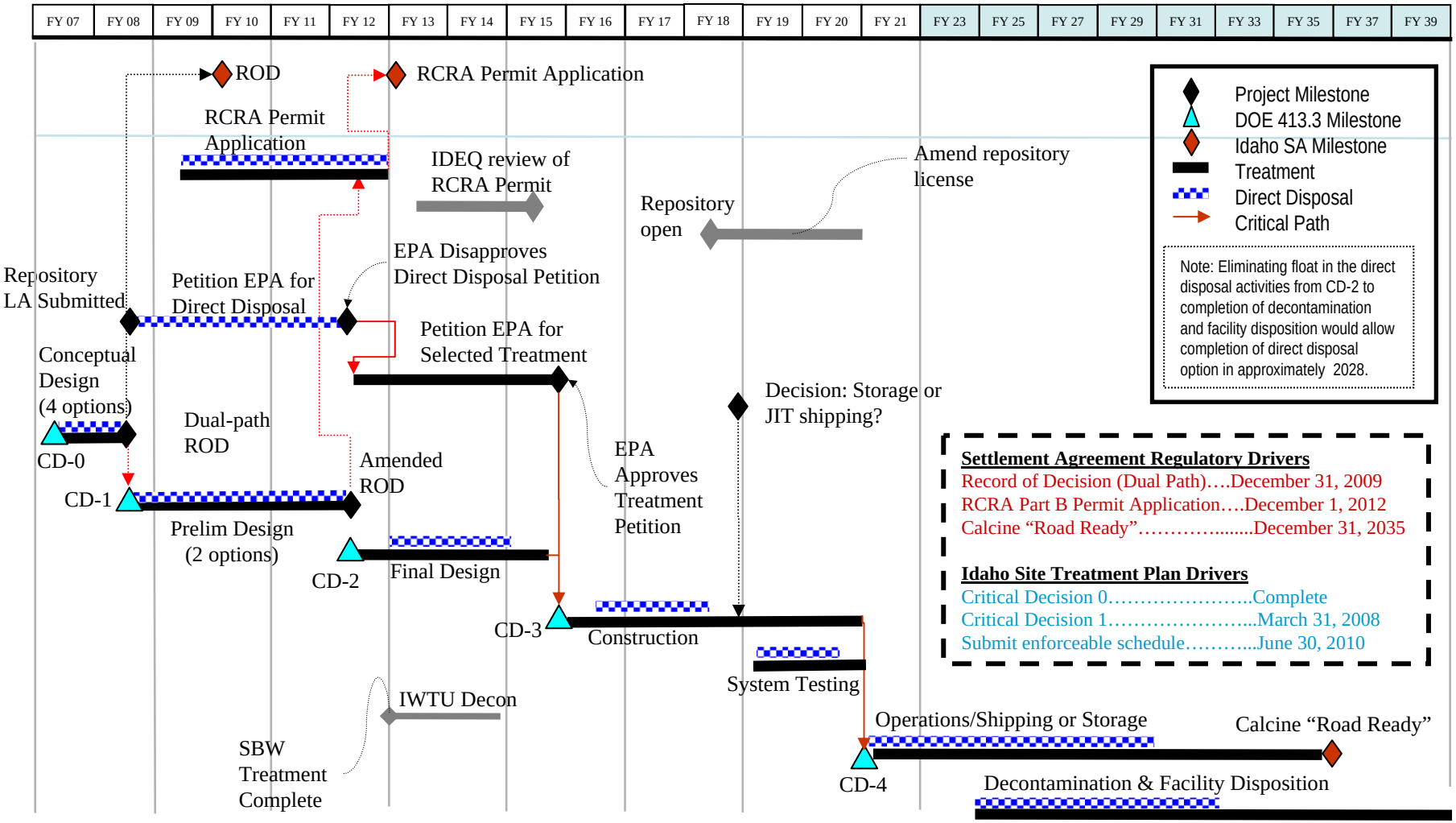

Project Issues and Challenges

- ***All (treatment and direct disposal) options require EPA approval***
  - For direct disposal, approval of petition for conditional exemption from definition of hazardous waste and the prohibitions on land disposal when disposed of in an NRC-licensed geologic repository is required
  - All of the treatment options (other than direct disposal) require petitioning EPA for delisting of final waste-form
  - All disposal options require state of Nevada acceptance of RCRA waste form under their RCRA authority even if delisted or conditionally exempted by EPA
    - *Material is subject to regulation under RCRA by state of Idaho as well – no known issues*
- ***Calcine ROD in 2009 and submission of RCRA Part B permit application in 2012 are required SA milestones***
  - Consequence of missed SA milestone includes potential suspension of DOE SNF shipments into Idaho
- ***Calcine milestones in the Idaho STP are indexed to the DOE Order 413.3A Critical Decision process***
  - Potential consequence of missed Idaho STP milestone is dispute resolution followed by probable Notice of Violation (NOV)
    - *Fines for NOV – up to $10K per day per violation ($430K/day for the 43 bins)*
    - *State-dictated closure schedule implemented by a Notice of Noncompliance Consent Order (NONCO) similar to the NONCO driving Tank Farm closure*

What is Next?

- ***Implement RCRA permit for continued interim storage in existing calcine bin sets***

- ***Update and re-submit draft petition for conditional exemption of Calcine from Land Disposal Requirements to DOE-HQ for approval prior to submittal to EPA***
  - Initiate discussions with EPA

- ***Develop and issue Dual Path Record of Decision***
  - Regulatory approach for each treatment/disposal option

- ***Further refine and validate cost/schedule, prepare CD-1A package & obtain CD-1A approval (alternative selection and cost range)***
  - Engineering and design funds authorization

- ***Perform technical and waste-form evaluations of HIP as an alternative treatment option at the Materials and Fuels Complex***
  - Being funded by EM-21