Status of Advanced Neutron Absorber Development

NSNFP Strategy Meeting

Bill Hurt

July 2006

Idaho National Laboratory

Project Overview

Problem:

- Some types of US DOE spent nuclear fuel (SNF) contain highly enriched uranium
- Final disposition of this SNF the repository may require criticality control during the regulatory period

Approach:

- SNF will be packaged in standardized canister with baskets fabricated from corrosion resistant neutron absorbing materials

Benefits:

- Decreased number of DOE SNF packages going to repository with reduced handling and materials costs.

DOE Standardized Canister

Fast Flux Test Reactor Fuel Canister

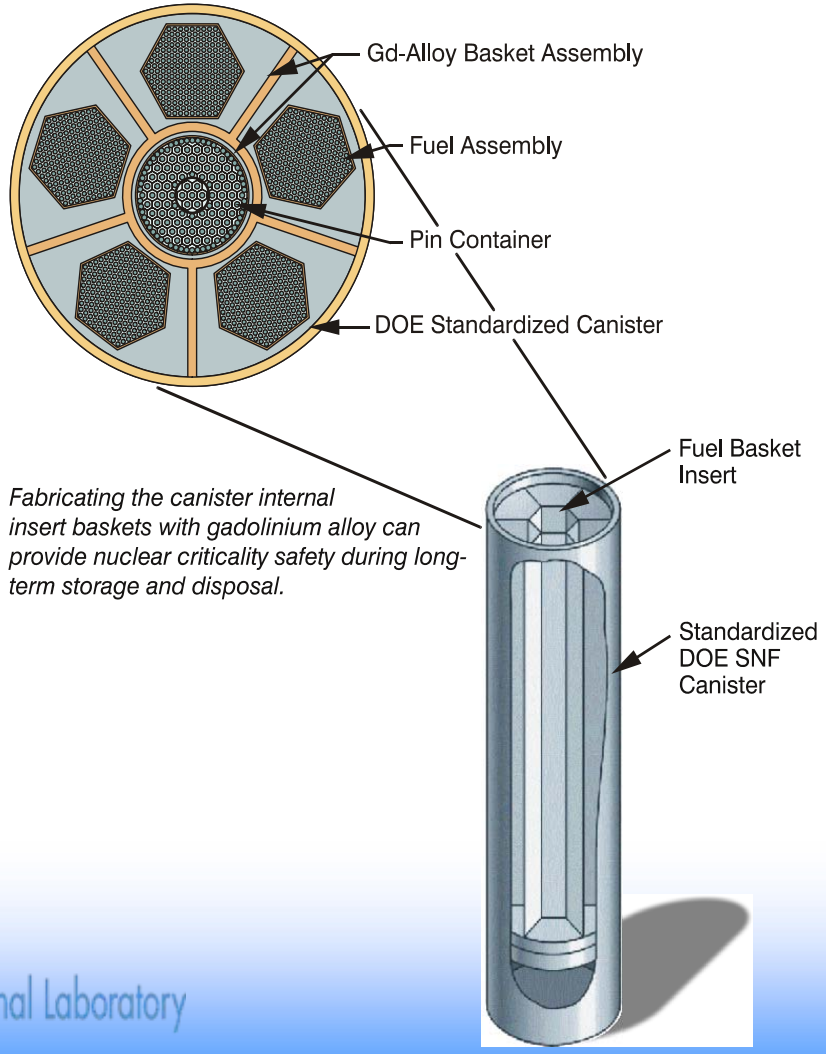

Fabricating the canister internal insert baskets with gadolinium alloy can provide nuclear criticality safety during long-term storage and disposal.

01-GA50018-05

HLW/DOE SNF Waste Package

Project Workflow

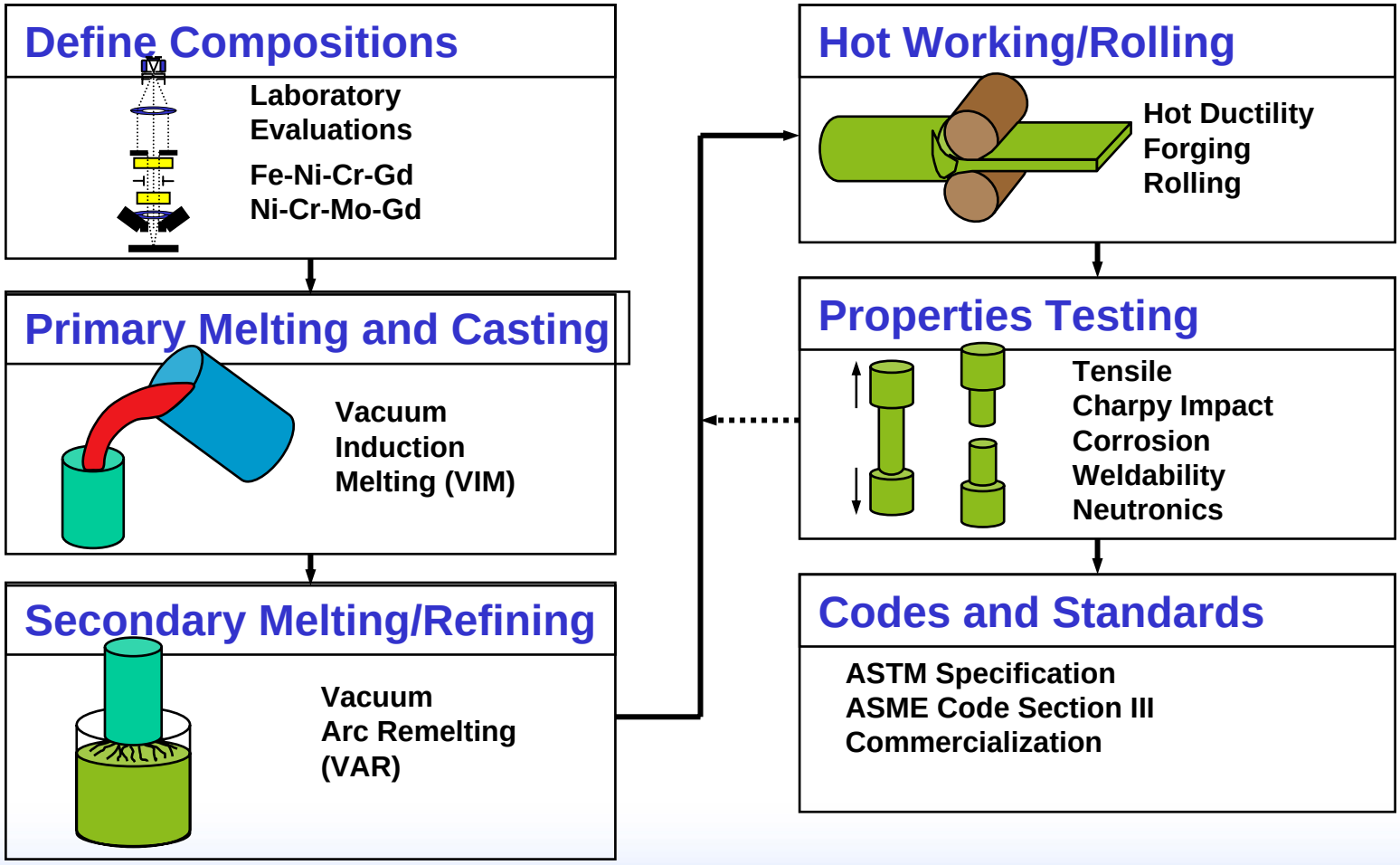

Current Situation

- ASTM Material Specification B932-04 for Ni-Cr-Mo-Gd Alloy has been issued
- ASME code case (N-728) for non-welded use completed
- Implementing detailed plan for large ingot production
- Initiating mechanical property measurements to support welded code case submittal

Scale-up Issues

- Generic Issues
  - Price and availability of Gadolinium report (completed)
  - Master alloy pilot study
  - Chemistry Control - Tramp elements from Scrap recycling/recovery
  - Chemistry standards
  - Safety
- VIM Studies (in progress)
- Secondary Melt
- Ingot Reduction (in progress)
- Surface Conditioning
- Material Acceptance
- Welding Development (in progress)
- Product Scale-up Confirmatory Analysis

Successful Reduction of 250lb Ingots

250lb Annealed Plate

~27 by 66 inches

250lb Plate Cutouts

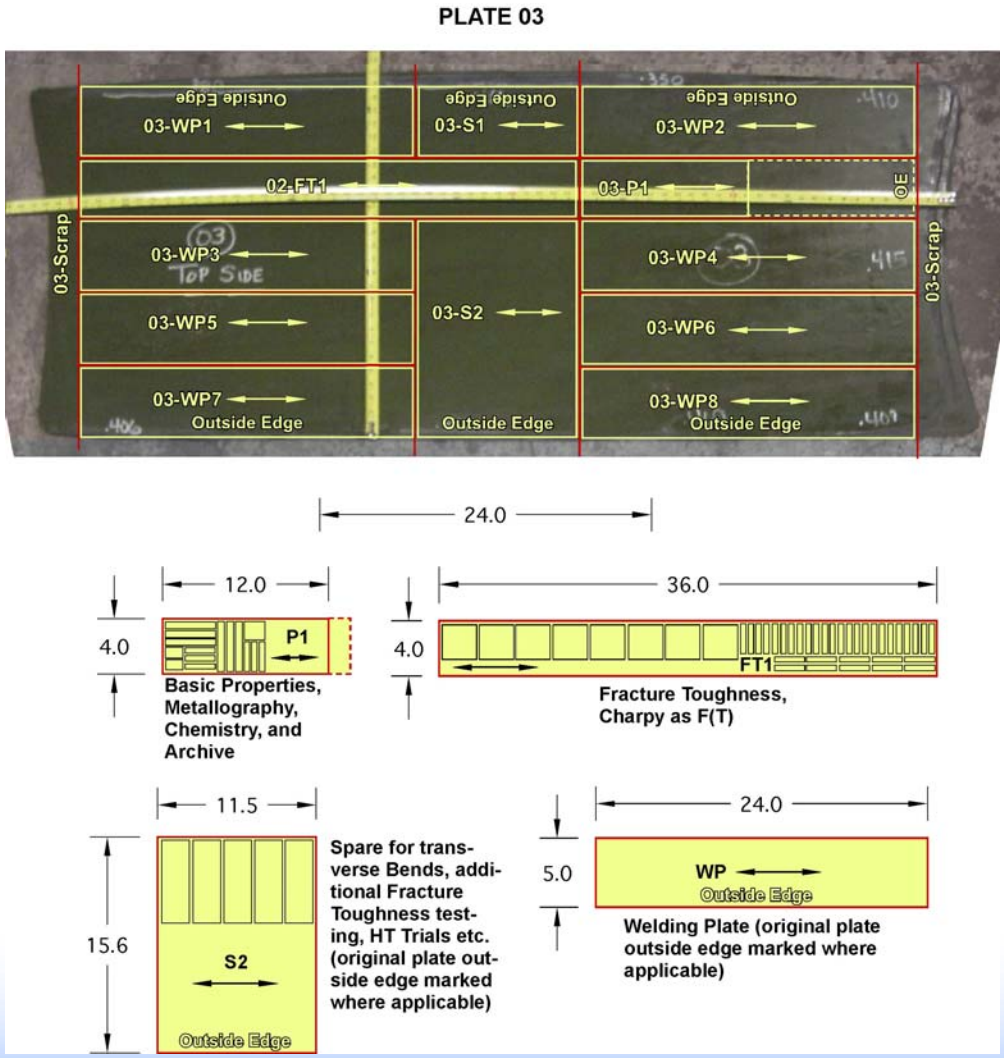

Idaho National Laboratory

Next Steps

- Perform chemical and mechanical measurements on 250lb ingots
- Begin weld development program
- Complete furnace lining interaction investigations
- Perform analytical investigation on de-ox/de-sulfur practice
- Perform analytical investigation on secondary melt practice
- Locate supplier for 3000 lb ingot

Furnace Melt Studies

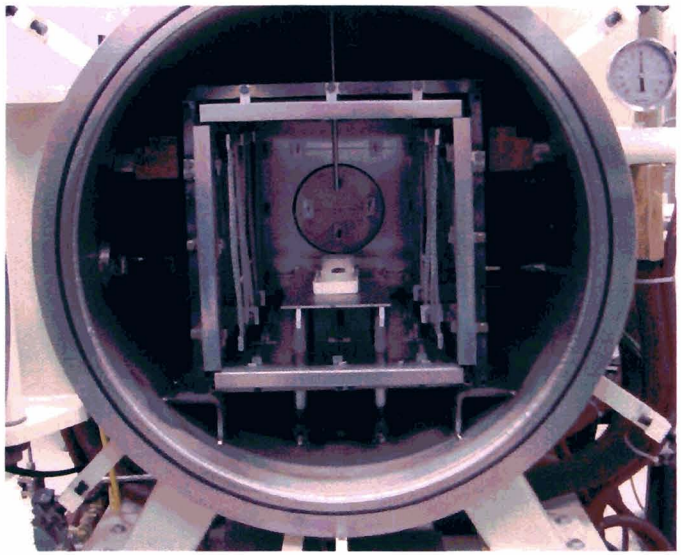

VIM Furnace

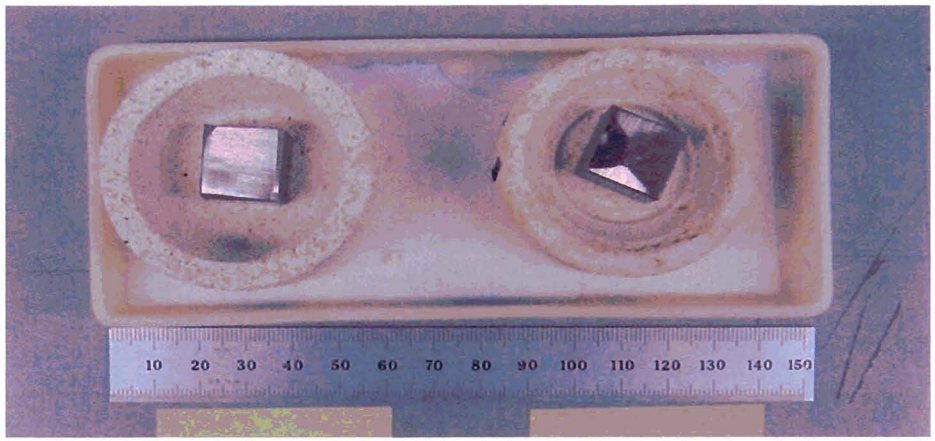

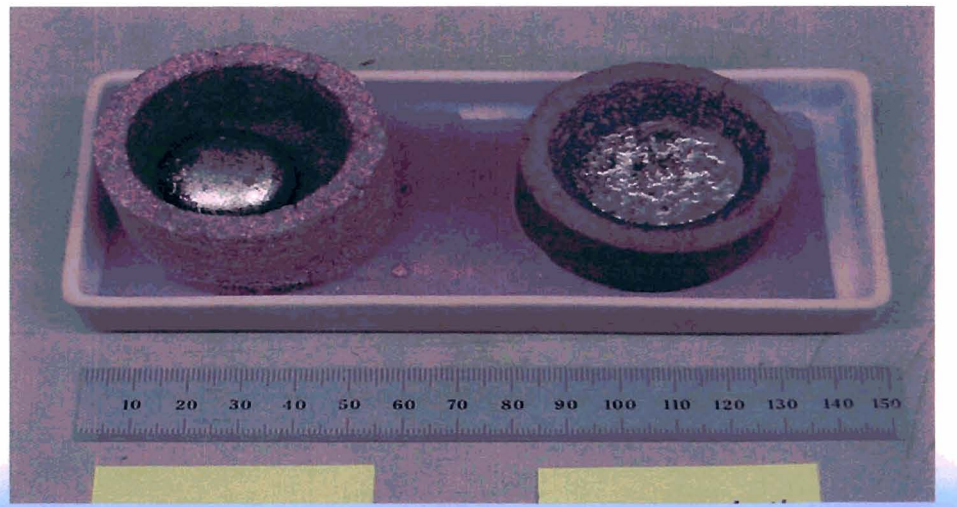

Summary

- Ni-Cr-Mo-Gd alloys can be made with conventional ingot metallurgy techniques
- The alloys will meet all performance requirements
  - Mechanical properties will meet ASME requirements in post-welded heat treated condition (transportation issue)
  - Thermal neutron absorption performance of prototype alloys is exceptional and consistent with published data
- Included in LA for DOE SNF
- Production material quantities ~24 months out