Appendix A

DOE SNF Category Description

A-1. DOE SNF CATEGORY DESCRIPTION

The following section describes the typical fuels within each of the DOE SNF categories and the various informations for each of the fuel categories. The category title indicates the SNF matrix follow by the dominant cladding material in the category. As an example, category 1 consists of U-metal matrix with the dominant cladding material of zirconium.

A-1.1 Category 1 U-metal/zirconium

Typical fuel: N-reactor

Fuel Description

The N-Reactor fuel elements consist of two concentric tubes made of uranium metal co-extruded into Zircaloy-2 cladding. There are two basic types of fuel elements differentiated by their uranium enrichment Mark IV fuels elements a pre-irradiation enrichment of 0.947% U-235 in both tubes and an average uranium weight of 50 pounds (22.7 kg). The Mark IV fuels have an outside diameter of 2.4 inches (6.1 cm) and a length of 17.4, 13.2, 24.6, or 26.1 inches (44, 59, 62 or 66 cm). Mark IA fuel elements have a pre-irradiation enrichment of 1.25% U-235 in the outer tube and 0.947% U-235 in the inner tube. They have an average uranium weight of 35.9 pounds (16.3 kg). Mark IA fuels have an outside diameter of 2.1 inches (6.1 cm) and a length of 14.9, 19.6, or 20.9 inches (38, 50, or 53 cm) [Reference 4].

The degraded condition of the N-Reactor fuels has created a vulnerability issue relative to their continued storage in a water environment. Breach of the fuel element cladding and long-term water storage has created an apparent uranium hydride formation. The original proposed remediation of these fuels includes drying and controlled oxidation of the hydride to an oxide for interim storage in a package labeled as a multi-canister overpack (MCO) [Reference 28]. However, the current plans are limited to only cold vacuum drying of the N-Reactor fuels prior to placing them into the MCO. The MCO has experienced evolutionary design changes; the basic unit will contain a close packed arrangement of either Mark IV or Mark IA fuels. While the original concept of the MCO is not intended as a repository-approved disposal package, no alternative or proposed package exists at this time. The physical size of the MCO is akin to the standard HLW glass package, and will therefore be modeled as a 4-pack within the repository overpack.

Each MCO consists of a 24 inches (61 cm) outer diameter shell that is 164 inches (416.6 cm) long. The package has a 0.375 inches (0.95 cm) wall thickness, and uses 304L stainless steel construction. The approximate mass of the empty MCO is 3,900 pounds (1,700 kg).

Category 1 U-metal Fuel Inventory/Information		
Radionuclide inventory (41 isotopes)	Refer to TSPA group listing data - Table D-1	
Composition	Breached fuel cladding uranium metal with possible oxide surface coating	
Matrix dissolution rate	Metal model	Section 3.1
Surface area (m^2/g)	7.0E-05	
Clad failure fraction	Assume 100% failed	
Free radionuclide inventory fraction	0.1%	
Gap fraction	0%	

Configuration and Package Count

The following table shows the disposal configuration, repository package count, and HLW used to co-dispose the category 1 SNF (based on 2,333 MTHM).

	# 5x1 10 ft	# 5x1 15 ft	# 3x1 15 ft	# 0x4 15 ft	PWR21 x 15 ft
Category 1 U metal, failed clad					
- repository pkg count	2	4		95	
- HLW can count	10	20		0	
- SNF canister count	2	4		380	

Tables A-1 and A-2 provide a summary listing of the various chemical components associated with the typical N-Reactor fuels. Figure A-1 depicts a typical N-Reactor fuel element; Figures A-2 through A-4 depict proposed layout of N-Reactor fuel packaging within an MCO as it was evaluated in the performance assessment.

Table A-1 N-Reactor fuel element description.

	Mark IV				Mark IA		
Pre-irradiation enrichment of U235	0.947% Enriched				1.25-0.947% Enriched		
Type-Length code [a]	E	C	S	A	M	F	T
Outer length (cm)	66.3	62.5	58.9	44.2	53.1	49.8	37.8
Element diameter (cm)							
1. Outer of outer		6.15				6.1	
2. Inner of outer		4.32				4.5	
3. Outer of inner		3.25				3.18	
4. Inner of inner		1.22				1.12	
Cladding weight (kg)							
I. Outer element	1.09	1.04	0.99	0.79	0.88	0.83	0.66
2. Inner element	0.55	0.52	0.50	0.40	0.24	0.51	0.40
Weight of uranium in outer (kg)							
1. (0.947% 235U)	15.96	15.01	14.15	10.48			
2. (1.25% 235U)					11.07	10.39	7.85
Weight of uranium Inner (kg) 0.947%	7.48	7.03	6.62	4.94	5.49	5.12	3.90
Weighted average of uranium in element (kg)		22.68				16.28	
Ratio of Zircaloy-2 to uranium (kg/MT)	70.0	70.8	71.6	77.1	85.5	86.3	90.4
Weighted ave. (kg/MT)		63.76				77.73	
% of total elements		63				37	
% of length type of each fuel	78	10	7	5	87	10	3
Displacement Volume(l/MT uranium)		66.77				66.77	

a. Letter code differentiates the different lengths of the Mark IV or Mark IA fuel elements, i.e., a type "E" element is 66.3 cm long. [Hanford Irradiated Fuel Inventory Baseline]

Table A-2 Chemical composition of 105-N-Reactor fuel elements.[a]

Element	Uranium Alloy 601	Zircaloy-2	Braze Filler
Aluminum	700-900	75	145
Beryllium	10	—	4.75-5.25 wt %
Boron	0.25	0.50	0.50
Cadmium	0.25	0.50	0.50
Carbon	365-735	275	500
Chromium	65	0.05-0.15 wt %	0.05-0.15 wt %
Cobalt	—	10	20
Copper	75	50	60
Hafnium		200	200
Hydrogen	2.00	25	50
Iron	300-400	0.07-0.20 wt %	0.06-0.21 wt %
Lead	—	100	130
Magnesium	25	20	60
Manganese	25	50	60
Molybdenum	—	50	50
Nickel	100	0.03-0.08 wt %	0.03-0.08 wt %
Nitrogen	75	80	200
Oxygen	—	—	2300
Silicon	124	100	250
Sodium	—	20	20
Tin	—	1.20-1.70 wt %	1.14-1.70 wt %
Titanium	—	50	50
Tungsten		50	100
Uranium	Balance	3.50	4
Vanadium	—	50	50
Zirconium	65	Balance	Balance

a. Concentrations given in parts per million (ppm) maximum or ppm range, unless indicated otherwise.

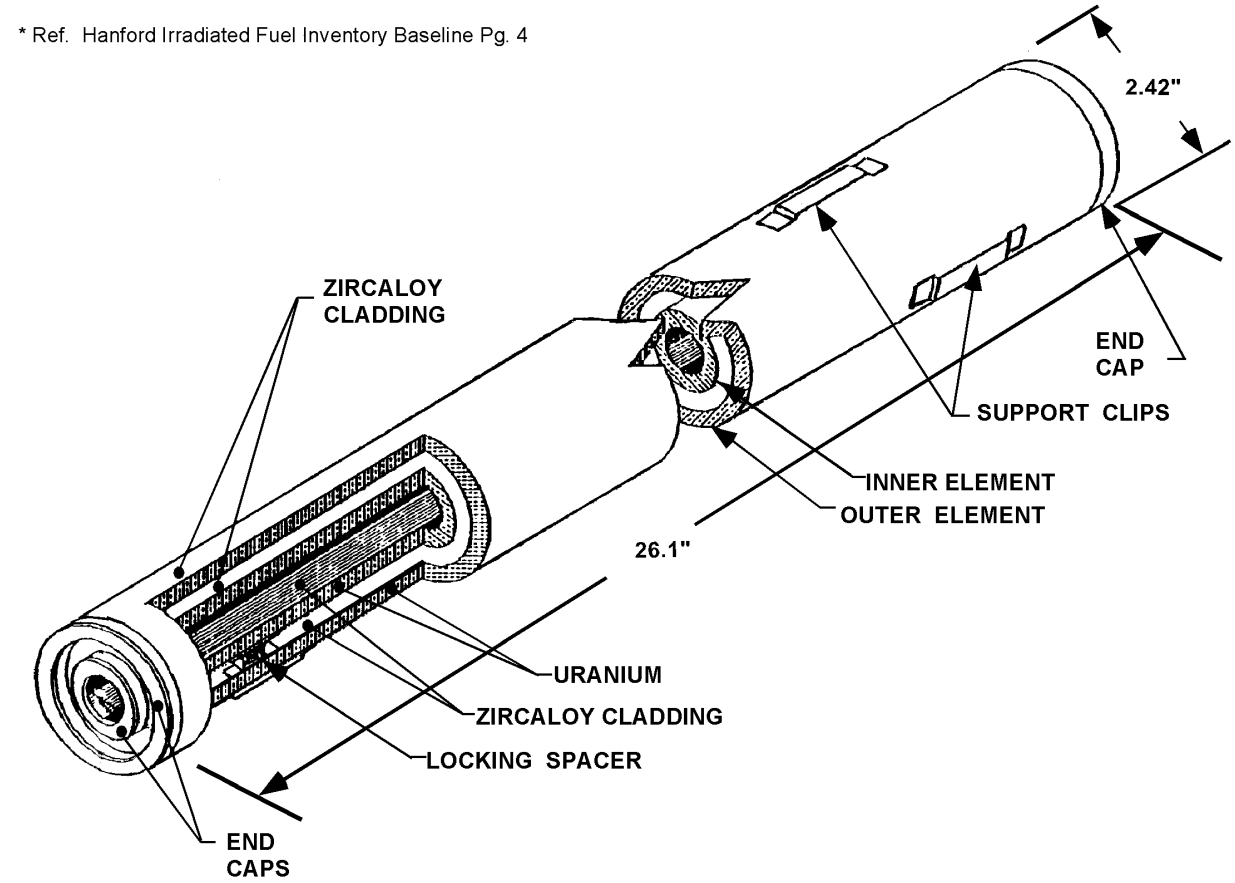

Figure A-1. N-Reactor Mark IV fuel element assembly.

Loading Arrangement for Mark IV Fuel in MCO Container.

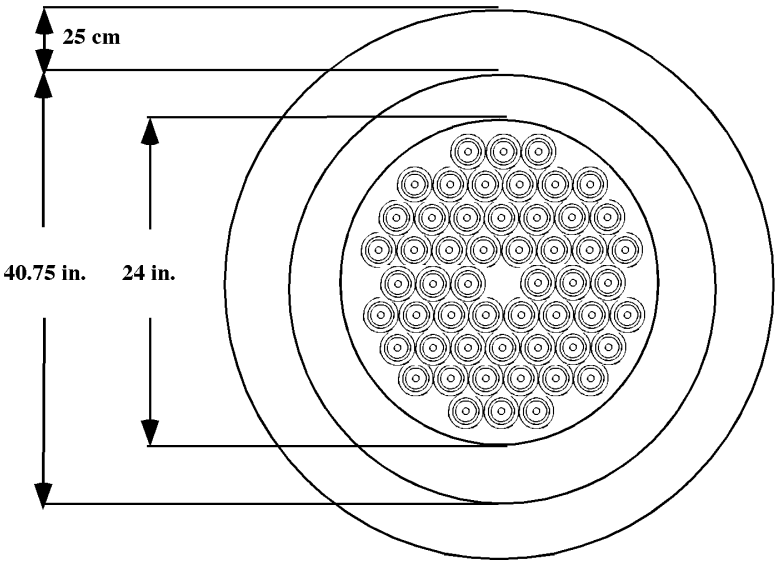

Loading Arrangement for Mark IA Fuel in MCO Container.

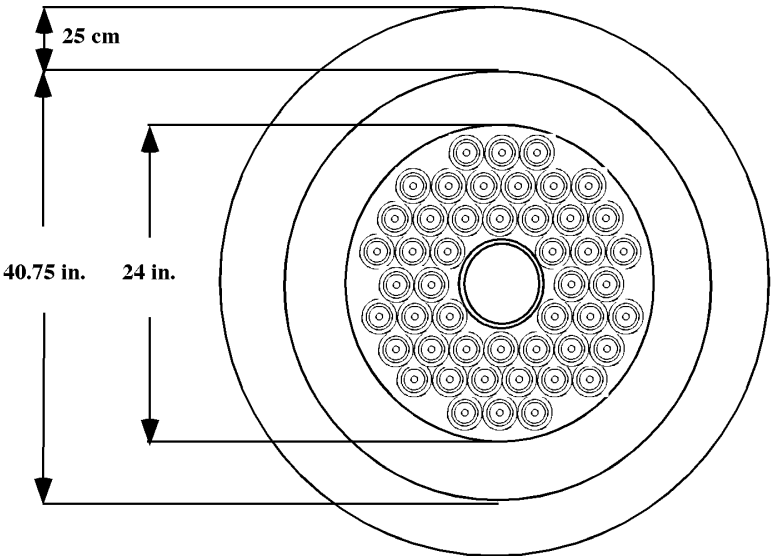

Figure A-2. (Top) Loading arrangement for Mark IV fuel in MCO container.
Figure A-3. (Bottom) Loading arrangement for Mark 1A fuel in MCO container.

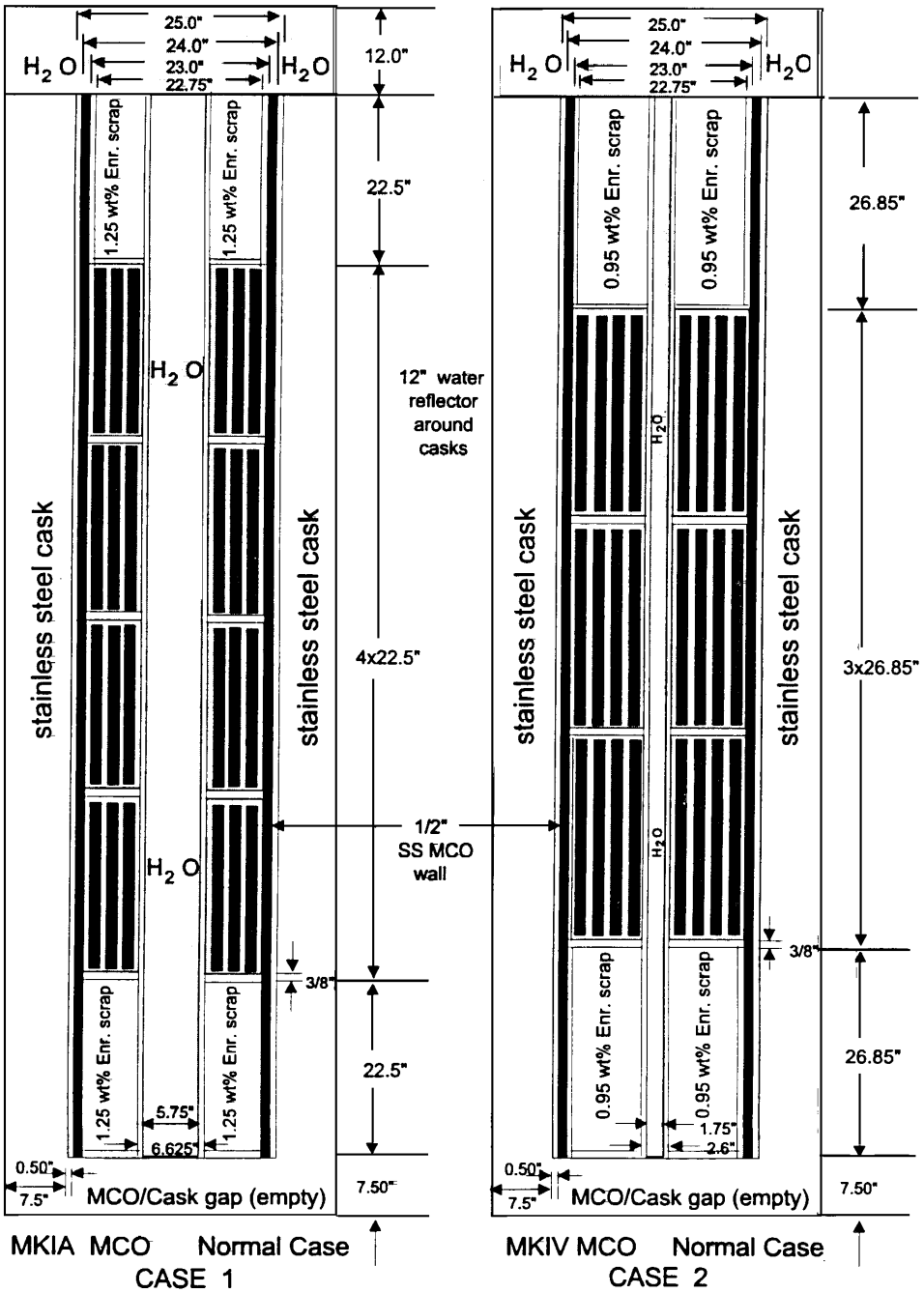

Figure A-4. MCO axial geometry layout.

A-1.2 Category 2 U-Zr/Zirconium

Typical fuel: HWCTR, CP-5

Fuel Description

The Heavy Water Components Test Reactor (HWCTR) is a tank-type, fully enriched (93%) uranium, heavy water moderated and cooled reactor. The purpose of the reactor was to test fuel elements, materials, and components for heavy water reactors at power reactor conditions. The reactor had a nominal thermal power of 61 MW. The driver fuel elements are located around the outside part of the reactor with up to 12 of the test fuel elements placed in the center of the reactor.

The driver fuels are tube type design with 2.3 inches (5.84 cm) outside diameter, 1.96 inches (4.98 cm) inside diameter and 113 inches (287 cm) long. The fuel meat is 0.137 inch (0.348 cm) thick consisting of 93% enriched uranium alloyed with 90.7 wt % zirconium. Figure A-5 contains a section view of the driver element [Reference 13]. The test elements are made of natural or slightly enriched uranium metal or uranium oxide. Thus, they are not included in this category.

Category 2 U-Zr Fuel Inventories/Information		
Radionuclide inventory (41 isotopes)	Refer to TSPA group listing data - Table D-1	
Composition	93% enriched uranium alloyed with 90.7 wt % zirconium	
Matrix dissolution rate	Metal model	Section 3.2
Surface area (m^2/g)	6.5E-03	
Clad failure fraction	Assume 10% failed	
Free radionuclide inventory fraction	0.001%	
Gap fraction	0%	

Configuration and Package Count

The following table shows the disposal configuration, repository package count, and HLW used to co-dispose the category 2 SNF (based on 2,333 MTHM).

	# 5x1 10 ft	# 5x1 15 ft	# 3x1 15 ft	# 0x4 15 ft	PWR21 x 15 ft
Category 2 U-Zr, Zr clad					
- repository pkg count	2	6			
- HLW can count	10	30			
- SNF canister count	2	6			

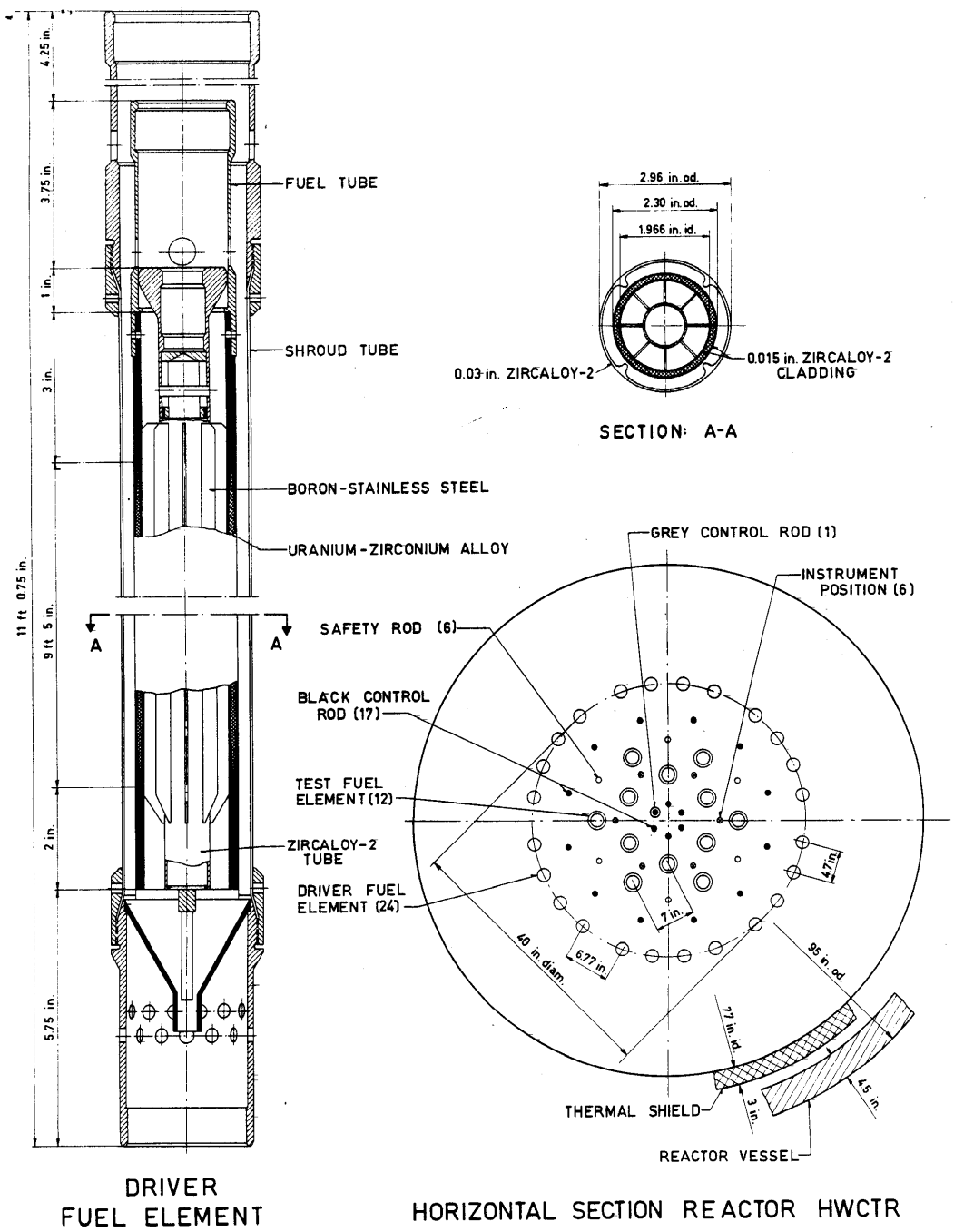

Figure A-5. Section view of the HWCTR driver fuel and reactor.

A-1.3 Category 3 U-Mo/Zirconium

Typical fuel: Fermi

Fuel Description

Fermi was a sodium-cooled fast breeder reactor with intermediate sodium loops, sodium-to-water steam generators, and an associated steam-driven turbine-generator. The lower reactor section of the reactor vessel has a 9.5 feet (289.56 cm) outside diameter and is 96.5 inches (245.11 cm) in height. Core and blanket subassemblies are housed within the lower reactor vessel and are cooled by sodium that flows from the bottom of the lower reactor through the subassemblies and up into the upper reactor vessel. Each subassembly has a nozzle attached to the bottom end for insertion into the two 2 inches support plates spaced 14 inches apart. The core and blanket of Fermi were made up of 2.646 inches (6.72-cm) square driver core and blanket subassemblies positioned to approximate a right circular cylinder approximately 80 inches in diameter and 70 inches tall. Figure A-6 shows the configuration of the core subassembly. The reactor core region was 30.5 inches in diameter and 31.2 inches tall and was completely enclosed by a thick breeder blanket that was designed to give a high breeding ratio and provide shielding.

The radial blanket fuel subassembly is made up of an inlet nozzle, a lower axial blanket, a fuel section, and an upper axial blanket. The radial blanket fuel subassemblies were made up of 25 cylindrical rods fabricated from depleted U-Mo alloy, encased in stainless steel tubes and bonded with sodium. The radial blanket subassemblies are currently stored dry in ICPP-749. The radial blanket subassembly rods contain depleted uranium and sodium and thus will be treated prior to final disposition. Those rods are not part of the category 3 inventory.

The Fermi driver fuel subassembly was designed with three active regions — a lower axial blanket, a fuel section, and an upper axial blanket. The lower and upper axial blanket subassemblies have been cropped off from the central core fuel section and are currently stored with the radial blanket subassemblies in ICPP-749 and will be treated prior to final disposal. A type 347 stainless steel square tube measuring 2.646 inches square with a 0.096 inch wall thickness was used as the outside structure to hold the three regions together. The fuel section contained 140 fuel pins, made up of 25.69% enriched uranium-molybdenum alloy. Four stainless steel structural support pins were inserted into the corner positions of the 12 x 12 array to add structural support to the fuel section and the fuel subassembly. The fuel pins were closely packed into the 2.646 inches square tube. The fuel pins were maintained on a square pitch of 0.200 inches in a cartridge made of stainless steel wires and plates.

The fuel pin is made up of a solid uranium-molybdenum alloy fuel meat, 0.148 inch in diameter, metallurgically bonded to a zirconium tube. The fuel material is 90 weight percent uranium that has been enriched to a nominal 25.69 percent in U-235, and 10 weight percent molybdenum. The fuel pins were originally fabricated in lengths of 12 feet or greater and were later cut into 30.5 inches sections with the ends pointed by cold swaging. Following the sectioning, each pin was subjected to heat treatment to provide for stress relief. Next, prefabricated zirconium caps were placed on the end of each pin and secured in place by cold swaging. The total length of the fuel pins including the zirconium endcaps is 32.78 inches. A slot was made in the bottom cap of the fuel pin for anchoring purposes [Reference 15].

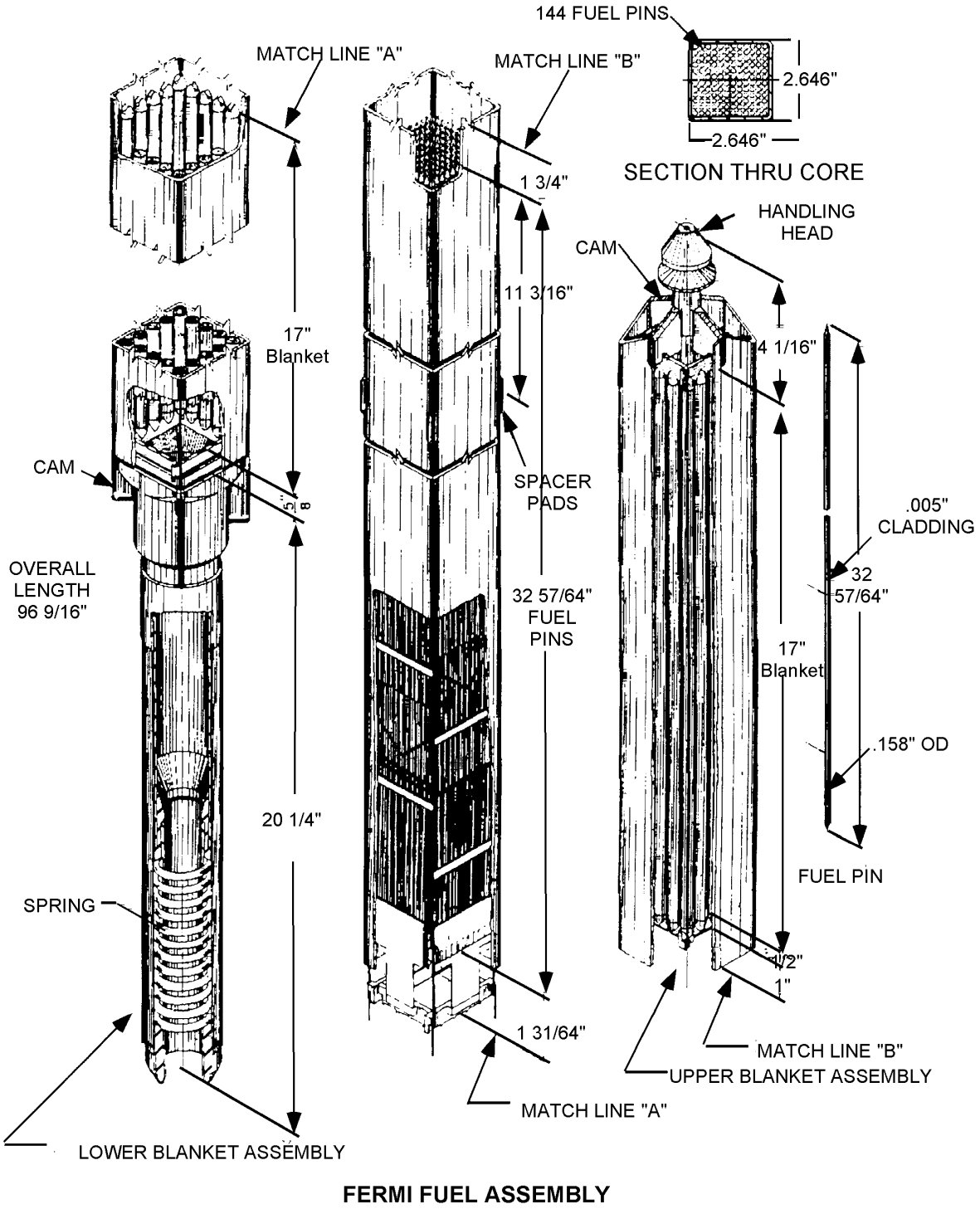

Figure A-6. Fermi driver fuel subassembly.

Category 3 U-Mo Fuel Inventories/Information		
Radionuclide inventory (41 isotopes)	Refer to TSPA group listing data - Table D-1	
Composition	Nominal 25.69% in U-235, and 10 wt % Mo	
Matrix dissolution rate	Metal model x 10	Section 3.3
Surface area (m^2/g)	4.0E-04	
Clad failure fraction	Assume 10% failed	
Free radionuclide inventory fraction	0.001%	
Gap fraction	0%	

Configuration and Package Count

The following table shows the disposal configuration, repository package count, and HLW used to co-dispose the category 3 SNF (based on 2,333 MTHM).

	# 5x1 10 ft	# 5x1 15 ft	# 3x1 15 ft	# 0x4 15 ft	PWR21 x 15 ft
Category 3 U-Mo, Zr clad					
- repository pkg count	66				
- HLW can count	330				
- SNF canister count	66				

A-1.4 Category 4 U Oxide/Zirconium & Stainless Steel

Typical fuel: Shippingport (HEU), commercial (LEU), Saxton (MEU), ML-1 (HEU), PBF (MEU), FFTF-TFA (LEU)

Fuel Description

The fuels in this category generally have the characteristics found in most of the commercial fuels (PWR and BWR). For one reason or another, these fuels have ended up in the DOE SNF inventory. As an example, the commercial fuels were brought to the DOE site for examination or testing programs while some were reconfigured for the Dry Rod Consolidation Test (DRCT) at the INEEL. The reconfiguration involved consolidating the fuel by removing the rods and placing them into canisters so as to double the number of rods in a volume equal to a standard commercial fuel assembly. Other examination or testing involved taking some of the assemblies and rods apart for post-irradiation examination. The fuel compositions, properties, and conditions are identical to the commercial fuel [Reference 29].

The Power Burst Facility (PBF) was used to test fuel materials and the driver fuel was included in the category 4 inventory. The PBF driver core fuel contains a pelletized ternary fuel (UO2-ZrO2-CaO-18.5% enriched) surround by a helium gas annulus, an insulator sleeve of (ZrO2-CaO), and cladded with 304L stainless steel. This fuel is similar to commercial fuel that is made by pressing the uranium oxide into pellets. The pellets are loaded into stainless steel tubes [Reference 15].

Another fuels such as the Shippingport PWR Core 2 Seed 2 were also included in the category 4 inventory. The Shippingport PWR was built to demonstrate the concept of a light water, slow breeder reactor using a commercial type pressurized water reactor (PWR). This was a joint AEC/Navy project that was designed for development and demonstration purposes of this type of reactor. Bettis Atomic Power Laboratory designed the reactor. The Naval Reactors Group of the AEC directed the project, and the power was distributed by Duquesne Light Company. The Navy's NRF and ECF facilities received the fuel after it was removed from the core. The Navy played a large part in all aspects of this reactor. Shippingport was designed and built to test different core designs and explore operating variables for large-scale nuclear reactors. The reactor was of the seed and blanket type and began operation with the first core (PWR-C1) in December 1957. The seed element was a zircaloy-clad plate-type fuel while the blanket fuel was in the form of pellets placed inside short (~10 inches) Zircaloy-2 tubes. The basic component of the seed elements was the fuel plate. A plate was formed by sandwiching an enriched (~93%) U-Zr alloy strip between two zircaloy-2 cover plates and four side strips. Figure A-7 shows the Shippingport PWR fuel subassembly [Reference 15].

Category 4 U-Oxide Intact Fuel Inventories/Information		
Radionuclide inventory (41 isotopes)	Refer to TSPA group listing data - Table D-1	
Composition	Pressed uranium oxide pellets	
Matrix dissolution rate	Commercial model	Section 3.4
Surface area (m^2/g)	9.5E-04	
Clad failure fraction	Assume 100% failed	
Free radionuclide inventory fraction	0.00%	
Gap fraction	1-2%	

Configuration and Package Count

The following table shows the disposal configuration, repository package count, and HLW used to co-dispose the category 4 SNF (based on 2,333 MTHM).

	# 5x1 10 ft	# 5x1 15 ft	# 3x1 15 ft	# 0x4 15 ft	PWR21 x 15 ft
Category 4 U oxide, Zr/SST clad					
- repository pkg count	62	120		5	15
- HLW can count	310	600		0	0
- SNF canister count	62	120		20	15

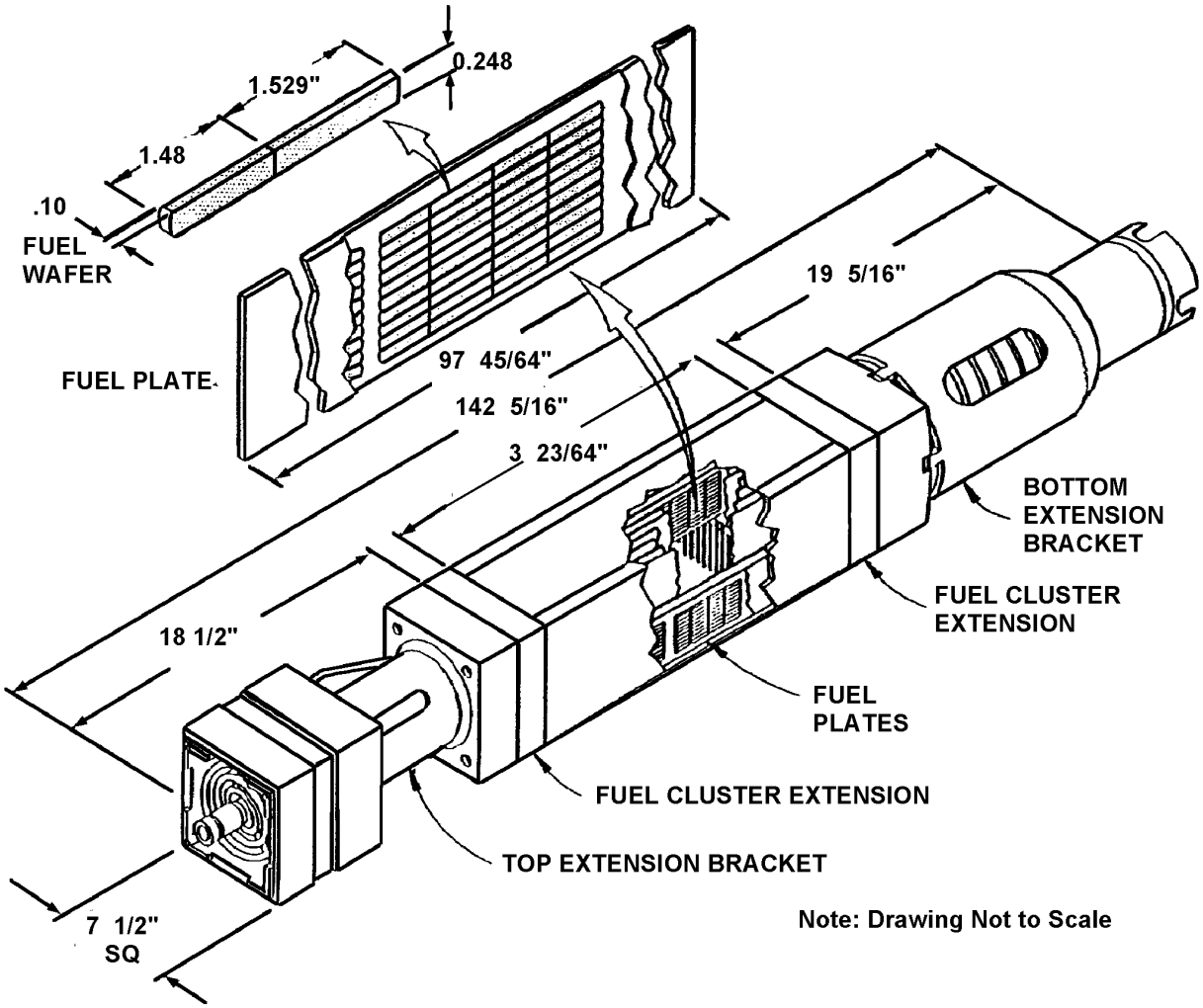

Figure A-7. Shippingport Core 2 Blanket Fuel Assembly

A-1.5 Category 5 U Oxide/Failed Clad or Aluminum

Typical fuel: SM-1A, ORNL SST & Zr (MEU), TMI-2 (LEU), HFIR, FRR, MTR

Fuel Description

The fuels in this category represent those materials that are already damaged, disrupted, or considered the least robust in terms of immediate fissile and fission product movement upon package breach. Many of the fuels in this category have been disrupted from their original configuration for number of reasons such as operational activities, testing, accidents, or destructive examination.

The bulk of this category consists of the packaged TMI-2 debris. The fuel was a typical commercial pressurized water nuclear reactor fuel until it melted in a reactor accident. It now consists of materials with sizes ranging from fines to nearly intact assemblies. Some of which have been melted and cooled. The fuel debris was placed into three types of stainless steel canisters: filter canister that contain the fines, knockout canisters that contain gravel consistency materials, and fuel canisters that contain large pieces of melted or unaffected assemblies. The materials have been extensively characterized as part of the TMI-2 reactor analysis [Reference 15].

Primary issues related to packaging this fuel category for disposal related to: (1) packaging for criticality control, and (2) drying material to prevent gas generation. Figure A-8 shows the canister configuration for the Three Mile Island unit 2 (TMI-2).

Category 5 U-Oxide Failed Clad Fuel Inventories/Information		
Radionuclide inventory (41 isotopes)	Refer to TSPA group listing data - Table D-1	
Composition	Pressed uranium oxide pellets	
Matrix dissolution rate	Commercial model	Section 3.5
Surface area (m^2/g)	9.5E-02	
Clad failure fraction	Assume 100% failed	
Free radionuclide inventory fraction	0.00%	
Gap fraction	0.01%	

Configuration and Package Count

The following table shows the disposal configuration, repository package count, and HLW used to co-dispose the category 5 SNF (based on 2,333 MTHM).

	# 5x1 10 ft	# 5x1 15 ft	# 3x1 15 ft	# 0x4 15 ft	PWR21 x 15 ft
Category 5 U oxide, mixed clad					
- repository pkg count	279	363			
- HLW can count	1,395	1,815			
- SNF canister count	279	363			

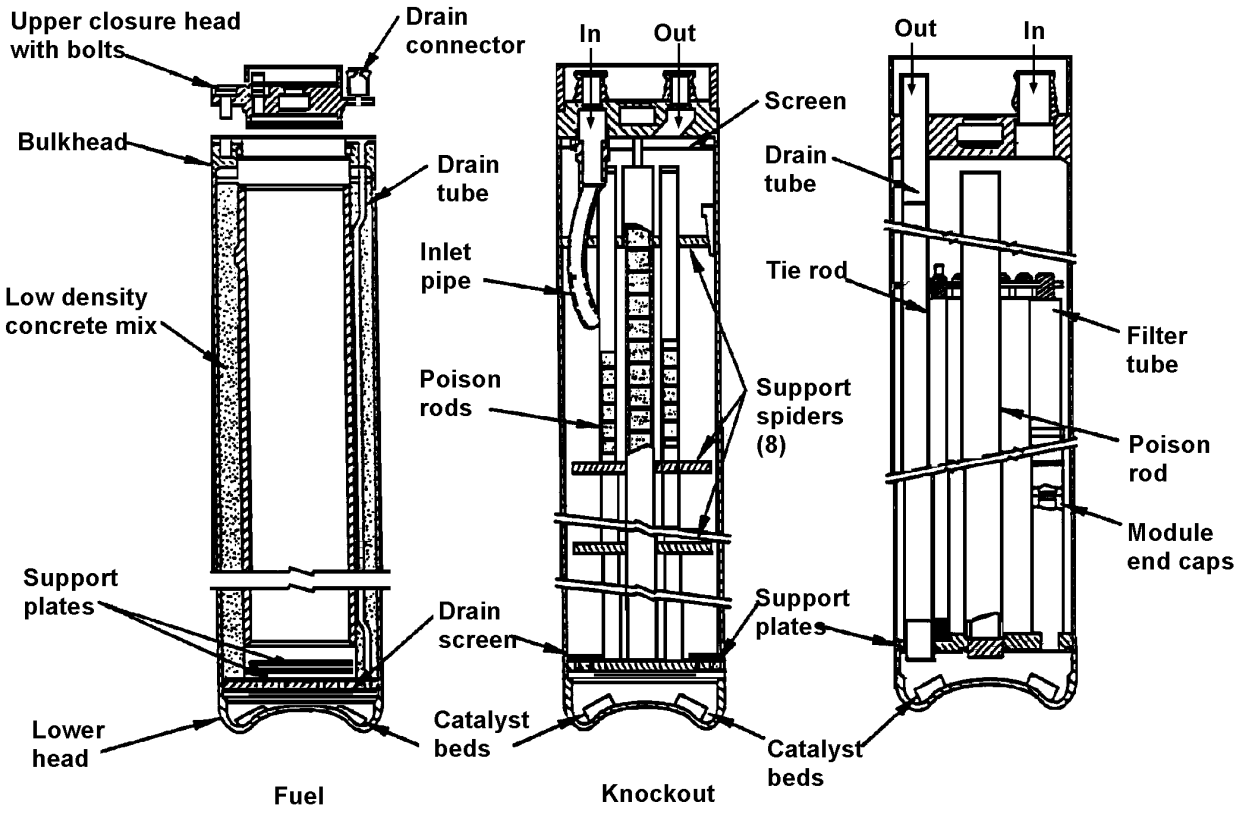

Diagram of the Three TMI-2 Canister Types

Figure A-8. TMI-2 canister types.

A-1.6 Category 6 U-Al_x / Aluminum

Typical fuel: ATR (HEU), MTR, FRR (MEU)

Fuel Description

This category includes fuels composed of a uranium-aluminum alloy. The cladding is assumed to be intact at this time, but is not considered to be a very durable material in long-term storage conditions in wet environments.

The typical Advanced Test Reactor (ATR) fuel element consists of 19 curved aluminum-clad fuel plates swaged into two non-fueled aluminum side plates. The 19 curved (concentric) aluminum-clad UAlx fuel plates form a pie-shaped geometry. The fuel meat consists of UAlx, boron, and aluminum particles mixed together and pressed into a 0.015 inch thick plate and clad with a 6061 aluminum foil (nominally 15 mils). The uranium and poison loadings are varied among the fuel plates giving a total U-235 loading of 1,075 grams per fuel element [Reference 15]. Figure A-9 shows the ATR fuel configuration. MTR is of a similar plate design but uses flat than curved plates.

Other UAlx fuels are similarly constructed and generic fuel information is indicated below.

Category 6 U-Al_x Al Clad Fuel Inventories/Information		
Radionuclide inventory (41 isotopes)	Refer to TSPA group listing data - Table D-1	
Composition	UAlx dispersed in aluminum	
Matrix dissolution rate	Metal model x 0.1	Section3.6
Surface area (m^2/g)	7.4E-03	
Clad failure fraction	Assume 100% failed	
Free radionuclide inventory fraction	0.01%	
Gap fraction	0	

Configuration and Package Count

The following table shows the disposal configuration, repository package count, and HLW used to co-disposed the category 6 SNF (based on 2,333 MTHM).

		# 5x1 10 ft	# 5x1 15 ft	# 3x1 15 ft	# 0x4 15 ft	PWR21 x 15 ft
Category 6	U alloy, aluminum clad					
	- repository pkg count	628	31			
	- HLW can count	3140	155			
	- SNF canister count	628	31			

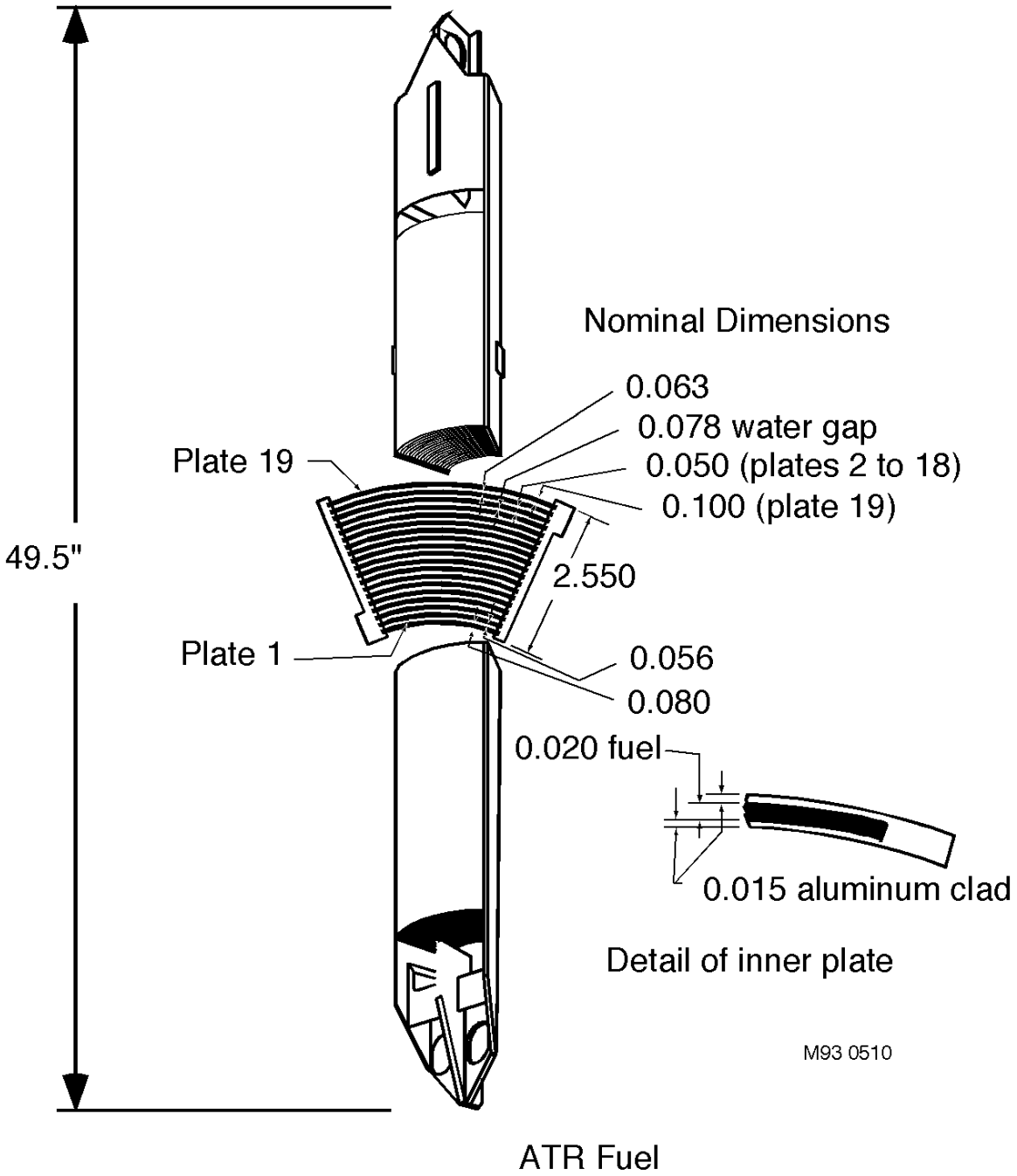

Figure A-9. ATR fuel element.

A-1.7 Category 7 U-Si

Typical fuel: MTR, FRR (HEU, MEU)

Fuel Description

The typical fuels in this category come from material test reactors and foreign research reactors (FRR). Most foreign research reactors will continue to operate during the next several years. Foreign reactor reactors use a number of different fuel designs. These designs can be placed into five groups: (1) plate-type design, (2) concentric tube-type design, (3) pin-type design, (4) special-type design, and (5) rod-type design. The various designs are shown in the *Final Environmental Impact Statement on a Proposed Nuclear Weapons Nonproliferation Policy Concerning Foreign Research Reactor Spent Nuclear Fuel*, Appendix B, DOE/EIS-0218F February 1996.

The plate type design is described here since it is used in the majority of the FRR fuels. The thermal power of these reactors ranges from 1 MW to 50 MW. Each fuel assembly contains from 6 to 23 plates and an initial U-235 content of 37 to 420 grams. The fuel matrix consists of U-Si dispersed in aluminum. Figure A-10 shows the plate-type MTR element.

Category 7 U-Si Fuel Inventories/Information		
Radionuclide inventory (41 isotopes)	Refer to TSPA group listing data - Table D-1	
Composition	U-Si dispersed in aluminum	
Matrix dissolution rate	Metal model x 0.1	Section 3.7
Surface area (m^2/g)	1.4E-02	
Clad failure fraction	Assume 100% failed	
Free radionuclide inventory fraction	0.01%	
Gap fraction	0	

Configuration and Package Count

The following table shows the disposal configuration, repository package count, and HLW used to co-dispose the category 7 SNF (based on 2,333 MTHM).

		# 5x1 10 ft	# 5x1 15 ft	# 3x1 15 ft	# 0x4 15 ft	PWR21 x 15 ft
Category 7	U silicide, aluminum clad					
	- repository pkg count	154	47			
	- HLW can count	770	235			
	- SNF canister count	154	47			

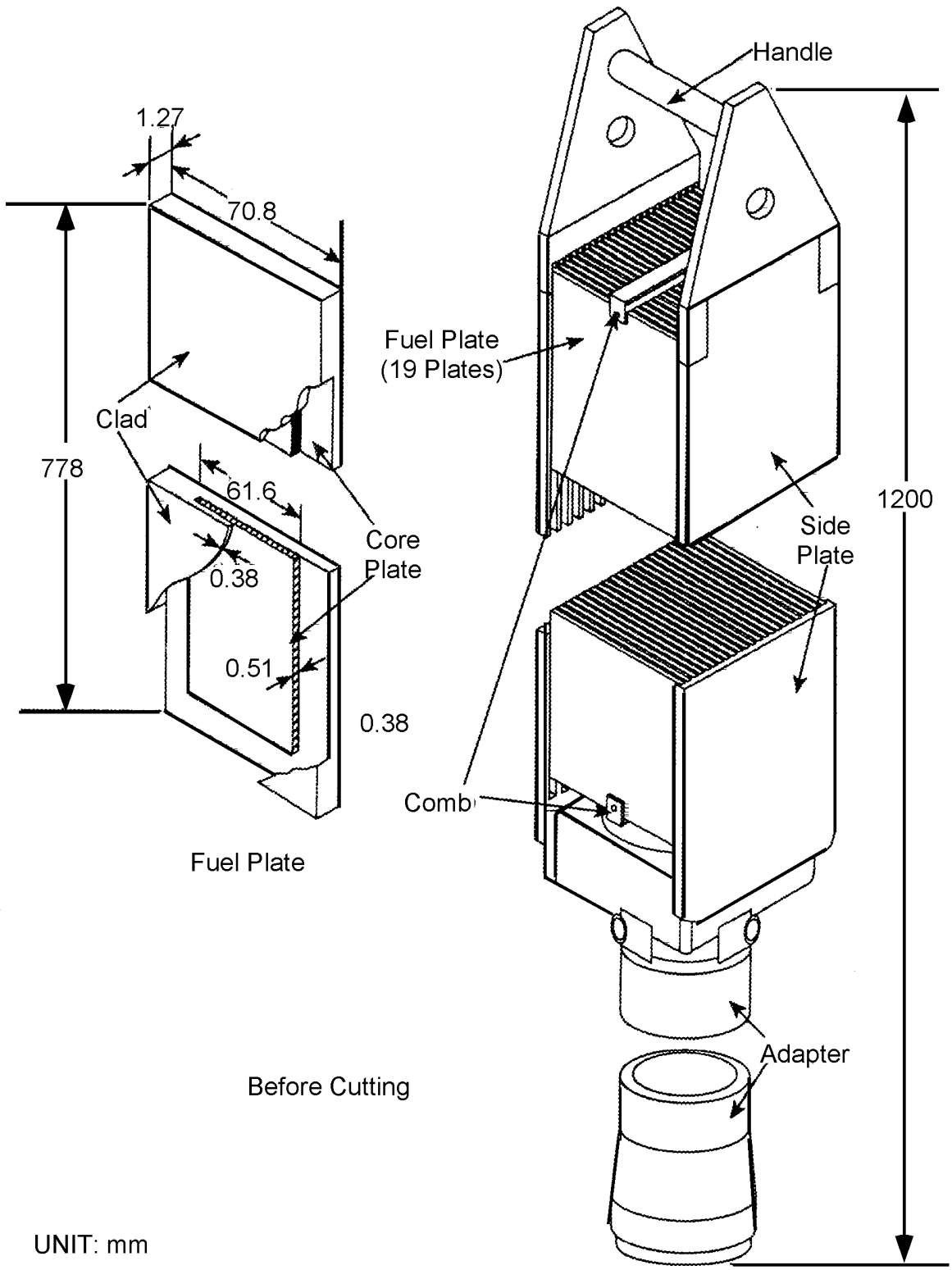

Figure A-10. Typical (boxed-type/flat plate) FRR fuel element.

A-1.8 Category 8 U/Th Carbide (Hi-Integrity)/Graphite

Typical fuel: Fort Saint Vrain (FSV)

Fuel Description

The FSV fuel is a graphite-based fuel that was used only in the Fort Saint Vrain Reactor. An assembly is composed of a hexagonal shaped graphite block drilled with 102 coolant holes and 210 fuel holes. The fuel is made of highly enriched uranium carbide and thorium carbide spheres coated with layers of pyrolytic carbon followed by a SiC protective outer coating, which is very durable, and an outer pyrolytic coating. The fuel spheres are sintered with carbon and formed into rods, called compacts, and then stacked into the fuel holes within large hexagonal blocks of graphite. These blocks are 14.172 inches (36 cm) across the flats, 8.102 inches (20.6 cm) on each side, and 31.22 inches (79.3 cm) long [Reference 15]. Figure A-11 shows the Fort Saint Vrain fuel assembly.

Category 8 U/Th carbide (high-integrity) Fuel Inventories/Information		
Radionuclide inventory (41 isotopes)	Refer to TSPA group listing data - Table D-1	
Composition	U/Th carbide	
Matrix dissolution rate	Si carbide model	Section 3.8
Surface area (m^2/g)	2.2E-02	
Clad failure fraction	Assume 1% Failed	
Free radionuclide inventory fraction	0.001%	
Gap fraction	0	

Configuration and Package Count

The following table shows the disposal configuration, repository package count, and HLW used to co-dispose the category 8 SNF (based on 2,333 MTHM).

		# 5x1 10 ft	# 5x1 15 ft	# 3x1 15 ft	# 0x4 15 ft	PWR21 x 15 ft
Category 8	Th/U carbide, graphite (FSV)					
	- repository pkg count		470			
	- HLW can count		2350			
	- SNF canister count		470			

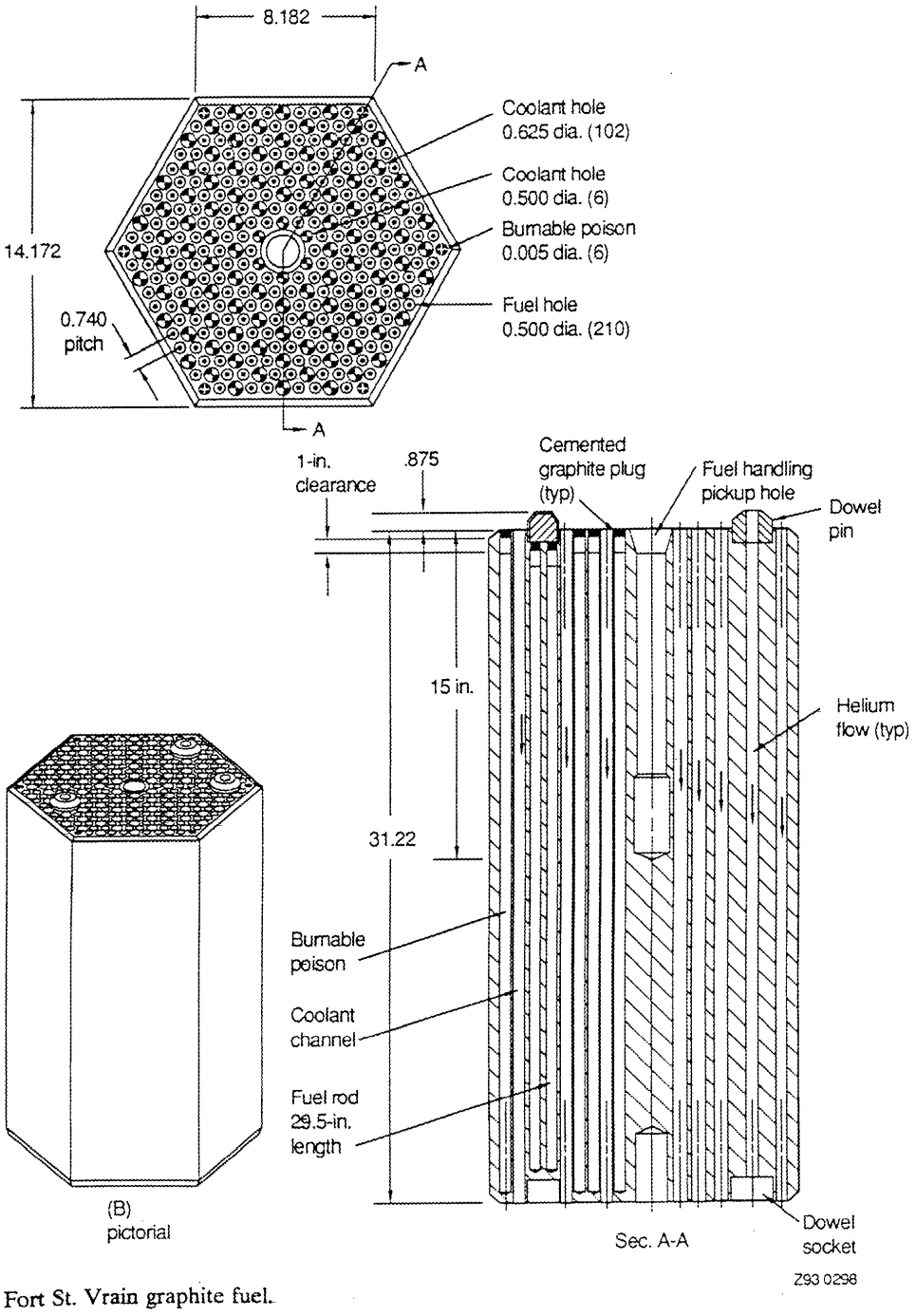

Fort St. Vrain graphite fuel.

Figure A-11. Fort St. Vrain graphite fuel.

A-1.9 Category 9 U/Th Carbide (Low-Integrity)/Graphite

Typical fuel: Peach Bottom

Fuel Description

The Peachbottom (PB) Core 1 is a graphite based fuel that is made of mixed uranium carbide and thorium carbide particles ranging from 295 to 630 microns in diameter and coated with pyrolytic carbon. However, there is no a SiC protective outer coating on the fuel particles. The particles are formed into annular compacts 2.98 inches (7.6 cm) high with a center hole diameter of 1.75 inches (4.45 cm) and an outside diameter of 2.7 inches (6.86 cm). the compacts are stacked on a 30 inches (76.2 cm) long graphite spine. Three units make up the 90 inches (228.6 cm) long fuel section. An annular low-permeability graphite sleeve is slipped over the fuel compacts [Reference 15]. The failure rate of the particles is estimated to be considerable higher than the FSV fuel particles. Figures A-12 and A-13 show the PB fuel assembly.

Category 9 U/Th Carbide (low-integrity) Fuel Inventories/Information		
Radionuclide inventory (41 isotopes)	Refer to TSPA group listing data - Table D-1	
Composition	U/Th carbide	
Matrix dissolution rate	Metal model x 10	Section 3.9
Surface area (m^2/g)	2.2E-02	
Clad failure fraction	Assume 60% failed	
Free radionuclide inventory fraction	10%	
Gap fraction	0.1%	

Configuration and Package Count

The following table shows the disposal configuration, repository package count, and HLW used to co-dispose the category 9 SNF (based on 2,333 MTHM).

		# 5x1 10 ft	# 5x1 15 ft	# 3x1 15 ft	# 0x4 15 ft	PWR21 x 15 ft
Category 9	Th/U carbide, graphite (PB)					
	- repository pkg count	56				
	- HLW can count	280				
	- SNF canister count	56				

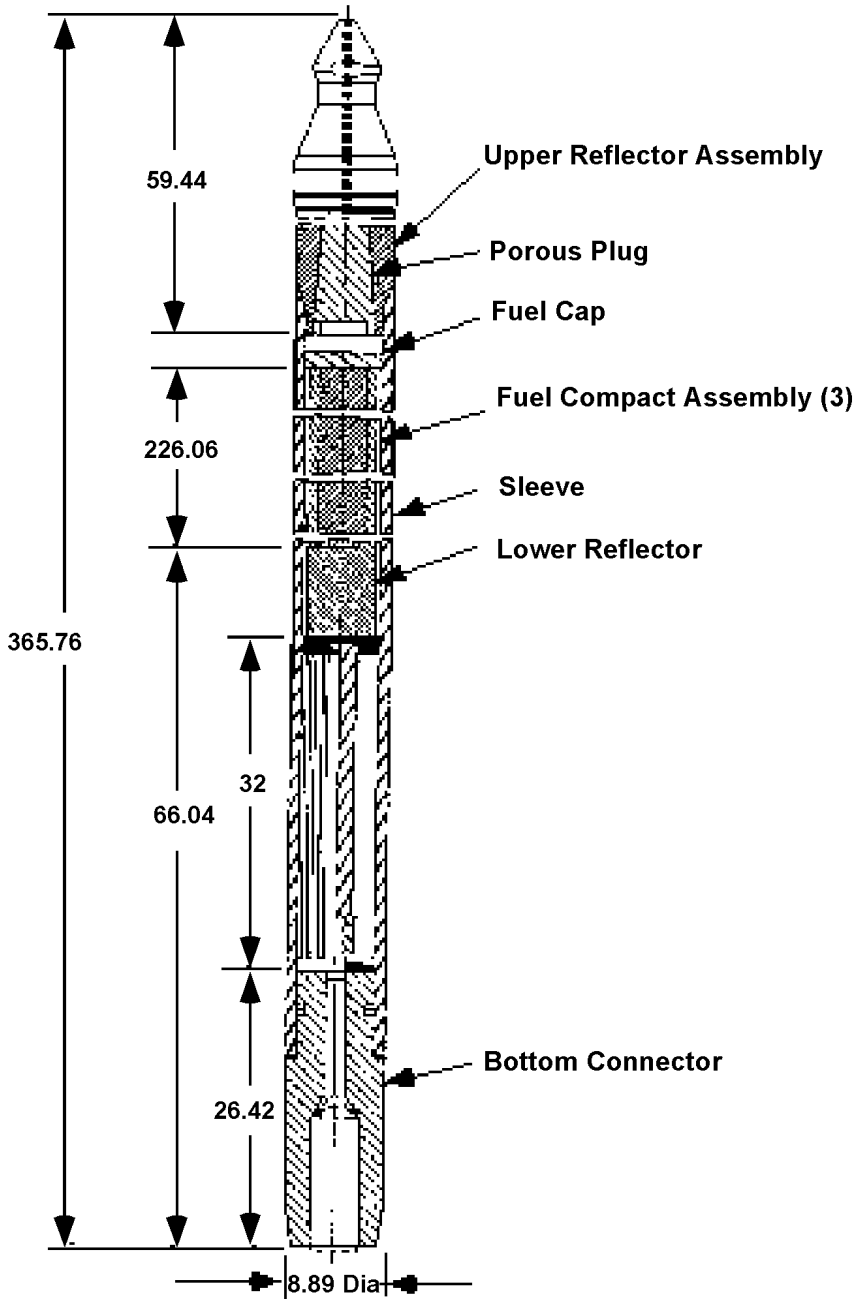

Figure A-12. Peach Bottom Unit 1, Core 1 fuel element.
(Drawing not to scale; dimensions in centimeters)

Fuel Type	Number of Elements Required
1	54
2	564
3	84
4	102

	804

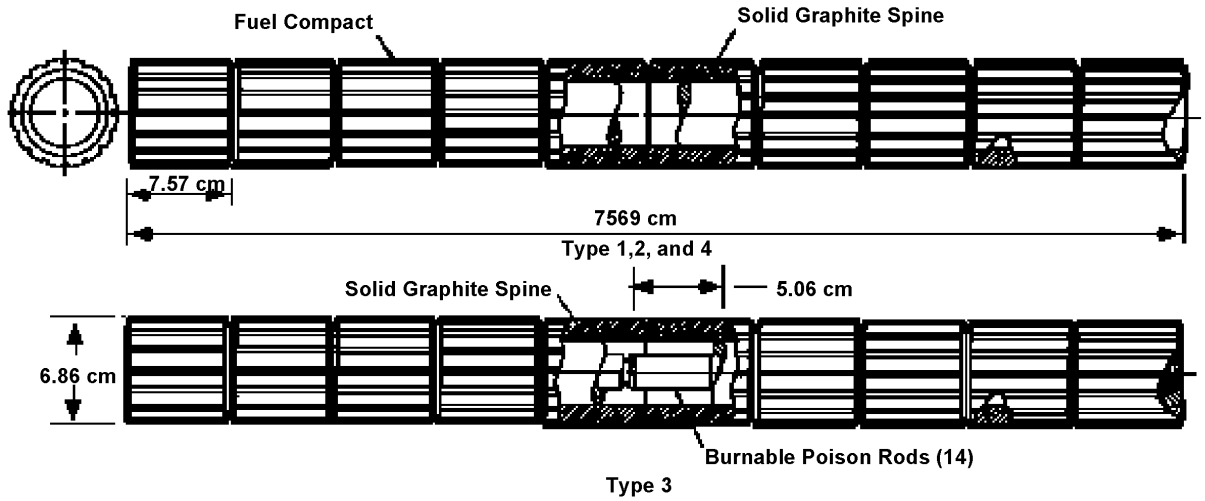

Peachbottom Assembly

Figure A-13. Peach Bottom Unit 1, Core 1 fuel compacts
(Drawing not to scale)

A-1.10 Category 10 U and U/Pu Carbide/Nongraphite

Typical fuel: SRE (MEU FGE), FFTF Carbide (MEU FGE)

Fuel Description

Category 10 fuels are mixed carbide fuel in a nongraphite matrix. A number of the fuels were test fuel assemblies (TFAs) from the Fast Flux Test Facility (FFTF). FFTF was to provide testing capability for a wide range of development needs of the United States advanced reactor program. The mission of the FFTF included irradiation and evaluation of different types of fuel assemblies and different materials for fuel assembly construction. The purposes of the TFAs vary and a few examples are indicated below. However, in general, the TFAs support the fuel or material requirements for large scale breeder reactors.

As an example, the FFTF-ACN-1 fuel in this category was tested to develop information on helium- and sodium-bonded mixed-carbide fuel pins with full length fuel columns at prototypic fluence and exposure conditions. Additionally, it tests the relative effects of 20% cold worked 316 SS and 25% cold worked D9 cladding on the carbide fuel pins. The assembly contains 18 sodium-bonded and 19 helium-bonded carbide fuel pins, enclosed in a 316 SS inner duct similar to the SRF-3. The outer region contains 90 standard driver fuel pins and is enclosed by a D9 duct [Reference 4]. The test fuel assembly's (TFAs) configuration is similar to the FFTF driver fuels shown on Figures A.15 and A.16 under category 11. The rods containing metallic sodium are not part of this category.

Another fuel assembly, the FFTF-AC-3 was tested in cooperative effort of the United States and Swiss governments and was part of the advanced liquid metal fast breeder reactor fuel program. The test compared performance of 66 pins containing pelletized fuel with that of 25 sphere-pac fuel pins at typical conditions of the breeder reactor. The pins are D9-clad, wire-wrapped, and were housed in a D9 duct. The fuel is mixed plutonium-uranium carbide with plutonium enrichments of 19.1% for the sphere-pac fuel and 19.7% for the pelletized fuel [Reference 4].

The FFTF-FC-1 assembly was tested to establish performance characteristics of a full size carbide fuel assembly. The assembly contains 91 large diameter [0.37 in (0.94 cm)], D9 clad, wire-wrapped, helium-bonded fuel pins. The plutonium enrichment is 21.4 % in uranium carbide, with 6.5 inches (16.5 cm) top and bottom blankets [Reference 4].

Category 10 U-Si Fuel Inventories/Information		
Radionuclide inventory (41 isotopes)	Refer to TSPA group listing data - Table D-1	
Composition	U & U/Pu carbide	
Matrix dissolution rate	Metal model x 100	Section 3.10
Surface area (m^2/g)	2.6E-03	
Clad failure fraction	Assume 10% failed	
Free radionuclide inventory fraction	0.00%	
Gap fraction	1-2%	

Configuration and Package Count

The following table shows the disposal configuration, repository package count, and HLW used to co-dispose the category 10 SNF (based on 2,333 MTHM).

		# 5x1 10 ft	# 5x1 15 ft	# 3x1 15 ft	# 0x4 15 ft	PWR21 x 15 ft
Category 10	Pu carbide, SST clad					
	- repository pkg count	3	2			
	- HLW can count	15	10			
	- SNF canister count	3	2			

A-1.11 Category 11 MOX/(Zr) (SST) (other)

Typical fuel: GE Test ((HEU FGE), FFTF-DFA (HEU FGE, FFTF-TFA-ACO (LEU & MEU FGE)

Fuel Description

MOX fuel is a blend of uranium dioxide and plutonium dioxide within various claddings. The uranium enrichment qualifies as "low" but the plutonium content increases the effective enrichment above 15%. The Fast Flux Test Facility (FFTF) driver fuel assembly (DFA) and test fuel assembly (TFA) contributed to large quantity of the fuel in this category. The standard FFTF-DFA is hexagonally shaped composed of 217 fuel pins. The assembly is 12 feet (3.6 m) long, 4.575 inches (11.6 cm) wide across the hexagon flats, 5.16 inches (13.1 cm) wide across the hexagon points, and weight 381 pounds (173 kg).

The driver fuel pins are 0.23 inch (0.58 cm) in diameters, approximately 93.5 inches (2.37 m) long and have a 36 inches (91 cm) fuel bearing region, which is centered 65.5 inches (1.66 m) from the bottom end of the fuel assembly. Each fuel pin is helically wrapped with a 0.056 inch (0.14 cm) diameter steel wire to provide lateral spacing along its length.

The fuel region contain approximately 150 pressed and sintered, mixed uranium-plutonium oxide pellets and has two 0.4 inch (1 cm) uranium oxide pellets on each end for temperature insulation. The mixed uranium-plutonium oxide is at a nominal theoretical bulk density of 90.4% and the uranium oxide in the insulator pellets is at a nominal theoretical bulk density of 95%. Figures A-14, and A-15 show the configuration of the standard FFTF-DFA fuel assembly [Reference 4].

Category 11 MOX Fuel Inventories/Information		
Radionuclide inventory (41 isotopes)	Refer to TSPA group listing data - Table D-1	
Composition	Mixed oxide - U oxide and Pu oxide	
Matrix dissolution rate	Commercial model	Section 3.11
Surface area (m^2/g)	9.5E-04	
Clad failure fraction	Assume 10% failed	
Free radionuclide inventory fraction	0.00%	
Gap fraction	1-2%	

Configuration and Package Count

The following table shows the disposal configuration, repository package count, and HLW used to co-dispose the category 11 SNF (based on 2,333 MTHM).

		# 5x1 10 ft	# 5x1 15 ft	# 3x1 15 ft	# 0x4 15 ft	PWR21 x 15 ft
Category 11	Pu/U oxide, Zr/SST clad					
	- repository pkg count	36	308			
	- HLW can count	180	1,540			
	- SNF canister count	36	308			

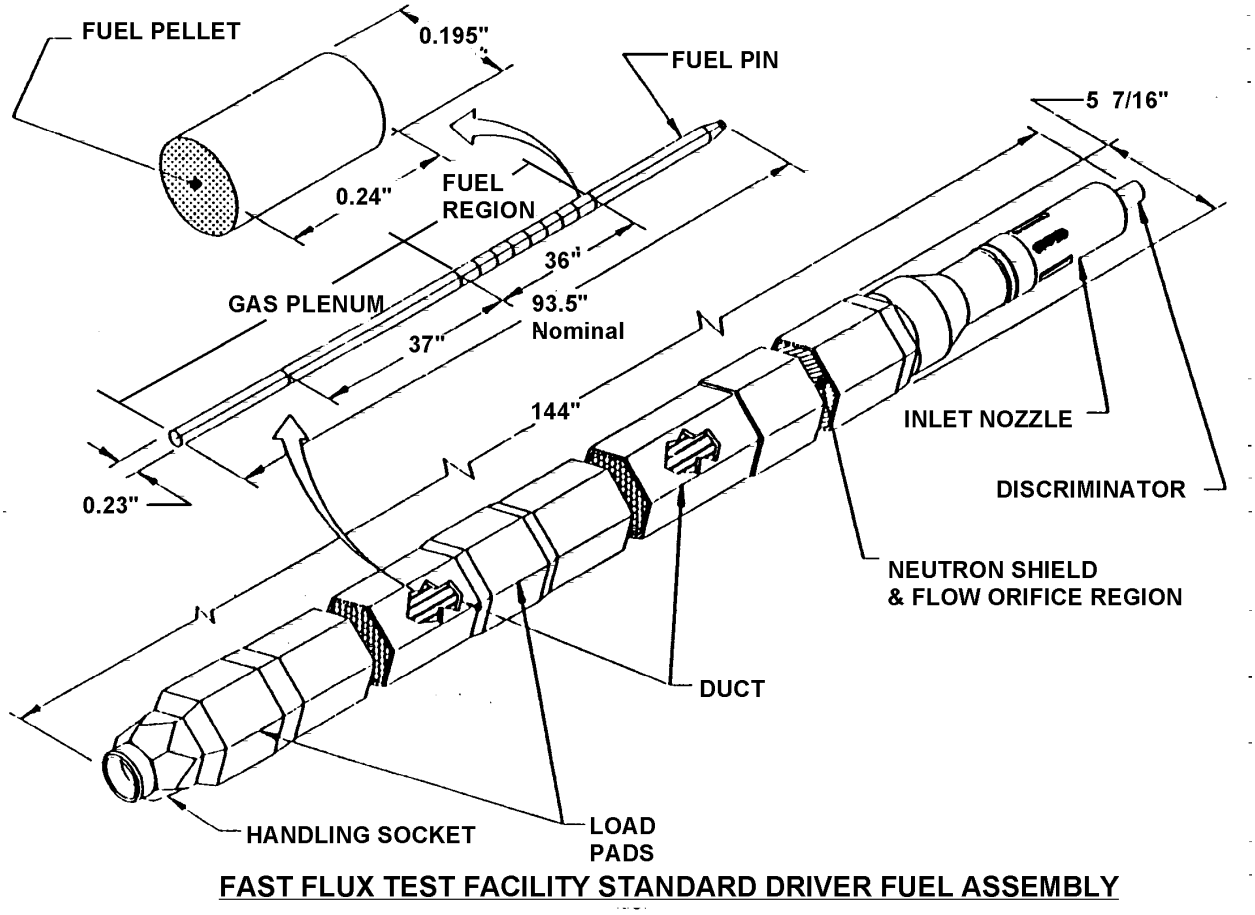

Figure A-14. FFTF standard driver fuel assembly.

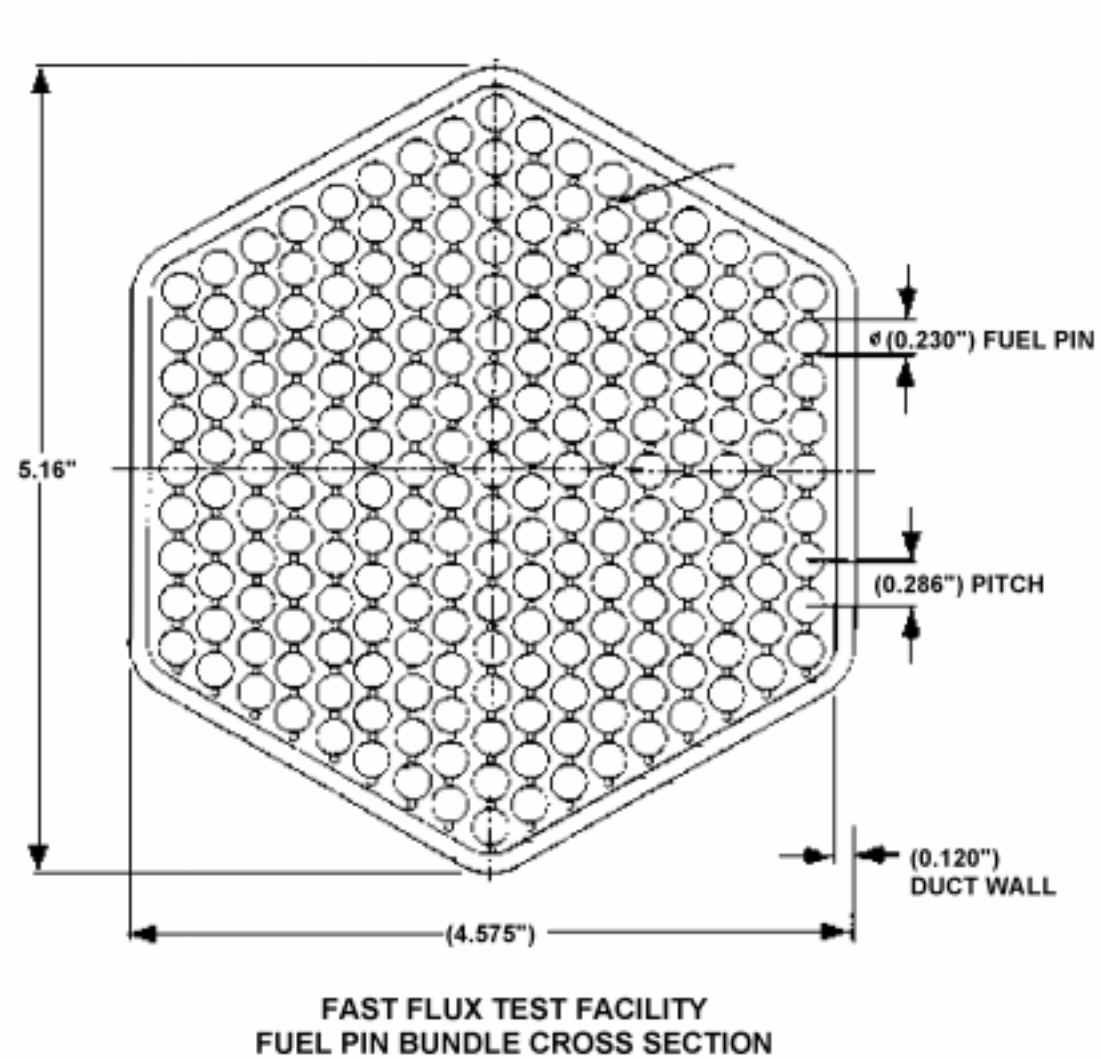

Figure A-15. FFTF pin bundle cross section.

A-1.12 Category 12 U/Th Oxide / (Zr) (SST)

Typical fuel: LWBR (HEU FGE), Dresden (HEU FGE)

Fuel Description

Shippingport Light water Breeder Reactor (LWBR) fuel makes up the major inventory of the fuel in category 12. The Shippingport LWBR was used to demonstrate the production of fissile uranium 233 from thorium in a water-cooled operating reactor. The fuel was made of uranium oxide, enriched up to 98% in uranium 233 (with a very small amount of U-235) mixed with thorium oxide made into cylindrically shaped ceramic pellets. The pellets were loaded into 0.3 in diameter zircaloy-4 tubes whose ends are capped and seal welded. These tubes were made into assemblies. The LWBR has four different types of assemblies: 12 seed assemblies used HEU to produce power, 12 blanket assemblies were used to capture neutrons and convert the thorium to uranium 233, and 9 type IV reflector assemblies and 6 type V reflector assemblies were used to reflect neutrons back into the reactor. The seed assemblies [beginning of life (BOL)] contain 3.67 wt % U-233. The standard blanket (BOL) contain 1.19-1.23 wt % U-233. The power flattening blanket (BOL) contain 2.06-2.08 wt % U-233. Figure A-16 shows the configuration of the Shippingport LWBR assembly.

Category 12 U/Th oxide Fuel Inventories/Information		
Radionuclide inventory (41 isotopes)	Refer to TSPA group listing data - Table D-1	
Composition	U/Th oxide	
Matrix dissolution rate	Ceramic model	Section 3.12
Surface area (m^2/g)	5.0E-04	
Clad failure fraction	Assume 10% failed	
Free radionuclide inventory fraction	0.00%	
Gap fraction	1-2%	

Configuration and Package Count

The following table shows the disposal configuration, repository package count, and HLW used to co-dispose the category 12 SNF (based on 2,333 MTHM).

		# 5x1 10 ft	# 5x1 15 ft	# 3x1 15 ft	# 0x4 15 ft	PWR21 x 15 ft
Category 12	Th/U oxide, Zirconium					
	- repository pkg count	14	9	44		
	- HLW can count	70	45	132		
	- SNF canister count	14	9	44		

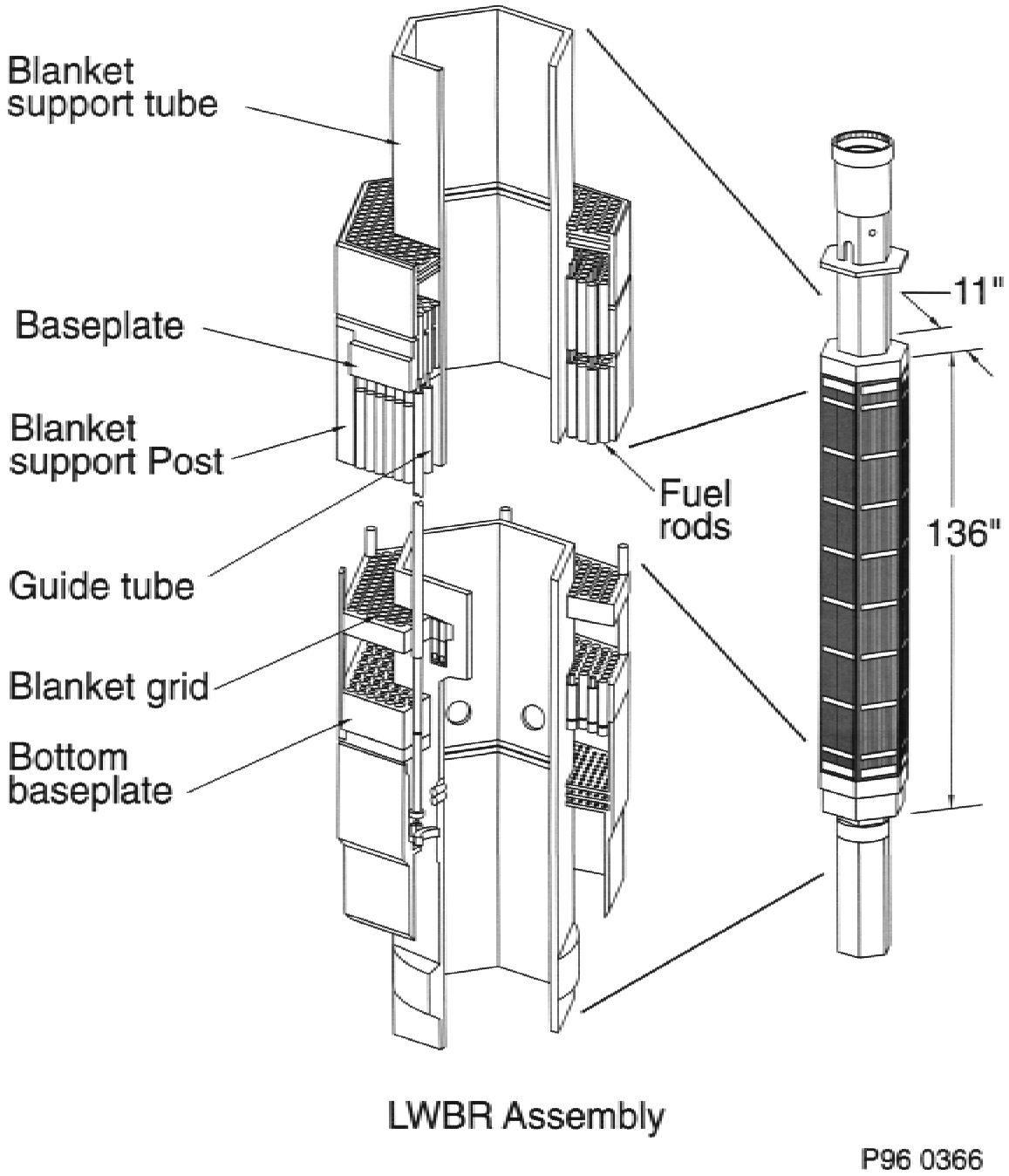

Figure A-16. Shippingport LWBR fuel assembly.

A-1.13 Category 13 U-Zr Hydride / (SST) (Incaloy) (other)

Typical fuel: TRIGA Flip (HEU), TRIGA Std. (MEU), TRIGA Alum (MEU), SNAP (HEU)

Fuel Description

Category 13 contains the fuel with the uranium/zirconium hydride matrix. Fuels from the TRIGA reactors make up the majority of the fuels in this category. The Training, Research, Isotope General Atomics (TRIGA) research reactor have been in use since 1957 throughout the United states and more than 20 countries world-wide. The TRIGA reactors are water-cooled, graphite and water reflected, pool-type research reactors that have steady-state and pulsing capabilities. There are six TRIGA reactors developed by General atomic, each having different experimental facility features to accommodate a user's specific needs.

Like all the fuels in this category, TRIGA fuel elements are made of a uranium-zirconium hydride matrix that provides the reactor with its build in control and inherent safety. They are solid homogeneous all clad with aluminum, stainless steel, or incoloy-800 and varying enrichment and weight percent of U-235 [Reference 30]. Figure A-17 shows a typical configuration of the TRIGA fuel assembly.

Category 13 U-Zr Hydride Fuel Inventories/Information		
Radionuclide inventory (41 isotopes)	Refer to TSPA group listing data - Table D-1	
Composition	U-Zr hydride	
Matrix dissolution rate	Commercial model x 0.1	Section 3.13
Surface area (m^2/g)	1.0E-04	
Clad failure fraction	Assume 10% failed	
Free radionuclide inventory fraction	0.001%	
Gap fraction	0.001%	

Configuration and Package Count

The following table shows the disposal configuration, repository package count, and HLW used to co-dispose the category 13 SNF (based on 2,333 MTHM).

		# 5x1 10 ft	# 5x1 15 ft	# 3x1 15 ft	# 0x4 15 ft	PWR21 x 15 ft
Category 13	U-Zr hydride, mixed clad					
	- repository pkg count	86	8			
	- HLW can count	430	40			
	- SNF canister count	86	8			

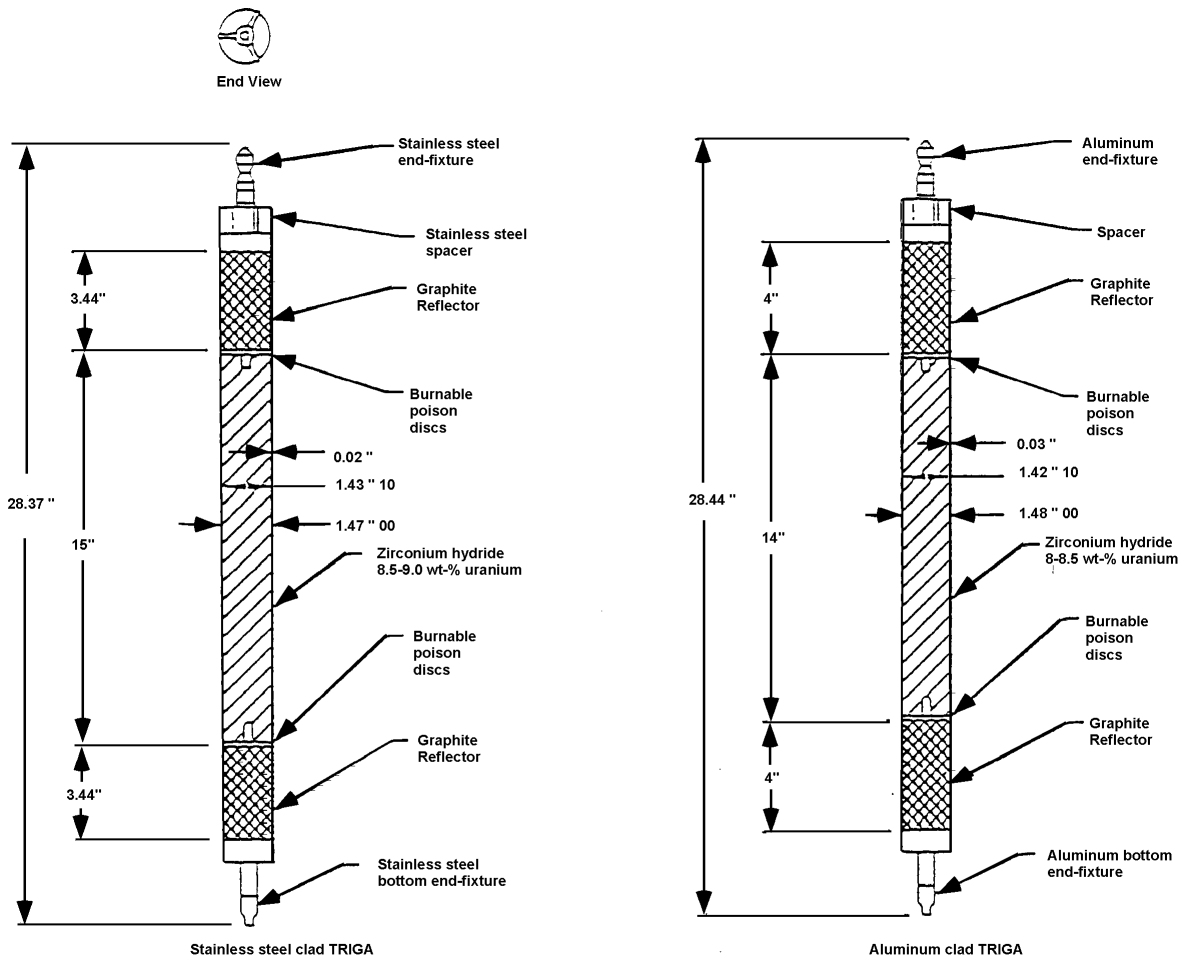

Standard TRIGA Fuel Element

Figure A-17. Standard TRIGA fuel element.

A-1.14 Category 14 Na-Bonded SNF

Typical fuel: Fermi Blankets

Fuel Description

Fermi was a sodium-cooled fast breeder reactor with intermediate sodium loops, sodium-to-water steam generators, and an associated steam-driven turbine-generator. For a detailed description of the fuel and reactor, see Appendix A.1.3 above.

This category consists of the lower and upper axial blanket subassemblies that have been cropped off from the central driver core fuel section and the radial blanket subassemblies. The typical blanket element of the Enrico Fermi Atomic Power Plant (FERMI I Blanket) consists of a U-10wt%-Mo alloy pin clad in a stainless steel tube with elemental sodium in the plenum spaces (of the tube) as a thermal bond. The geometry of the fuel element consists of 140 long, thin (0.443 in. - dia.) cylindrical pins closely packed to form 2 and 1/2 in. square bundles. The fuel meat consists of U-10wt%-Mo alloy composed of depleted uranium (0.36% U-235). They are stored in ICPP-749 and will be treated prior to final disposal.

A-1.15 Category 15 Classified Navy Fuel

Typical fuel: Navy Fuel

Fuel Description

Due to the classified nature of the Navy fuel, it was placed in its own category and all information concerning this category will be provided by the Navy and will not be addressed here.

A-1.16 Category 16 Miscellaneous DOE SNF

Typical fuel: Miscellaneous DOE SNF

Fuel Description

The remainder DOE SNF that does not fit into the above categories are placed in this category. Due to the varying matrices, cladding, and condition of this group of fuel, the plan is to bound the fuel properties in the performance evaluation with the worst performing DOE SNF.

Category 16 Miscellaneous DOE SNF Inventories/Information		
Radionuclide inventory (41 isotopes)	Refer to TSPA group listing data - Table D-1	
Composition	Miscellaneous compositions	
Matrix dissolution rate	Metal model	Section 3.16
Surface area (m^2/g)	7.5E-05	
Clad failure fraction	Assume 100% failed	
Free radionuclide inventory fraction	0.1%	
Gap fraction	0	

Configuration and Package Count

The following table shows the disposal configuration, repository package count, and HLW used to co-dispose the category 13 SNF (based on 2,333 MTHM).

		# 5x1 10 ft	# 5x1 15 ft	# 3x1 15 ft	# 0x4 15 ft	PWR21 x 15 ft
Category 16	Miscellaneous DOE SNF, mixed clad					
	- repository pkg count	23	19			
	- HLW can count	115	95			
	- SNF canister count	23	19			

Appendix B

DOE SNF Surface Area Calculation

Appendix C

DOE SNF Volume Calculation

Appendix D

Radionuclide Inventory Summary of DOE SNF and HLW

Table D-1. DOE-owned SNF Radionuclide Inventory at the year 2030

COMPLEX CUM	TSPA Category	TSPA Category	TSPA Category	TSPA Category	TSPA Category	TSPA Category
2,333 MTHM SNF, no HLW	1	1	2	2	3	3
	MTHM	packages	MTHM	packages	MTHM	packages
Hanford	1962.45	95				
INEEL	1.57	6	0.04	8	3.51	66
SRS	15.85	0				
Total	1979.88	101	0.04	8	3.51	66
	total curies	Ci/pkg	total curies	Ci/pkg	total curies	Ci/pkg
Isotopes						
AC227	9.3903E-03	9.2973E-05	3.5603E-08	4.4504E-09	4.5333E-04	6.8686E-06
AM241	4.8103E+05	4.7627E+03	2.8789E+00	3.5987E-01	2.9730E-03	4.5045E-05
AM242M	2.7934E+01	2.7657E-01	8.7230E-03	1.0904E-03	0.0000E+00	0.0000E+00
AM243	1.1808E+02	1.1691E+00	2.8415E-02	3.5519E-03	4.7793E-11	7.2413E-13
C14	6.1831E+02	6.1219E+00	6.1023E-05	7.6279E-06	1.4338E-01	2.1724E-03
CL36	0.0000E+00	0.0000E+00	0.0000E+00	0.0000E+00	3.6547E-04	5.5375E-06
CM244	3.5866E+03	3.5511E+01	1.1718E+00	1.4647E-01	4.4630E-12	6.7621E-14
CM245	1.5194E+00	1.5044E-02	5.9900E-05	7.4875E-06	1.2159E-17	1.8423E-19
CM246	2.2475E-01	2.2253E-03	4.1181E-06	5.1477E-07	4.0061E-21	6.0699E-23
CS135	7.4650E+01	7.3911E-01	5.7654E-02	7.2067E-03	2.9519E-01	4.4726E-03
CS137	8.3715E+06	8.2886E+04	5.5033E+04	6.8792E+03	0.0000E+00	0.0000E+00
I129	6.8555E+00	6.7876E-02	1.2205E-02	1.5256E-03	7.5554E-03	1.1448E-04
NB93M	3.4000E+02	3.3663E+00	6.4767E-02	8.0959E-03	3.0116E-01	4.5631E-03
NB94	2.3990E-03	2.3753E-05	1.2242E-05	1.5303E-06	5.4821E-02	8.3062E-04
NI 59	3.4735E+01	3.4392E-01	0.0000E+00	0.0000E+00	4.4981E-01	6.8153E-03
NI 63	3.2773E+03	3.2449E+01	0.0000E+00	0.0000E+00	9.3477E+00	1.4163E-01
NP237	7.2342E+01	7.1626E-01	1.4975E-01	1.8719E-02	2.1753E-02	3.2959E-04
PA231	2.4438E-02	2.4196E-04	1.7109E-06	2.1386E-07	1.2792E-03	1.9381E-05
PB210	1.3646E-07	1.3510E-09	6.4393E-12	8.0491E-13	9.3828E-09	1.4216E-10
PD107	1.4032E+01	1.3893E-01	8.5358E-03	1.0670E-03	8.3637E-03	1.2672E-04
PU238	1.0581E+05	1.0476E+03	3.2271E+02	4.0339E+01	1.0859E+00	1.6453E-02
PU239	2.1749E+05	2.1534E+03	8.0116E+00	1.0015E+00	1.2862E+02	1.9488E+00
PU240	1.2840E+05	1.2713E+03	4.5674E+00	5.7092E-01	4.0061E-01	6.0699E-03
PU241	1.6211E+06	1.6051E+04	1.5724E+03	1.9655E+02	3.9359E-02	5.9634E-04
PU242	6.7957E+01	6.7284E-01	6.8511E-03	8.5638E-04	2.4951E-09	3.7804E-11
RA226	1.9550E-03	1.9356E-05	1.6398E-11	2.0497E-12	4.2170E-08	6.3894E-10
RA228	1.5886E-07	1.5729E-09	9.2845E-13	1.1606E-13	2.6321E-07	3.9880E-09
SE79	1.0919E+02	1.0811E+00	2.2013E-01	2.7517E-02	1.0894E-01	1.6506E-03
SM151	1.3800E+05	1.3663E+03	1.9842E+02	2.4802E+01	4.5333E+02	6.8686E+00
SN126	1.4715E+02	1.4570E+00	1.9692E-01	2.4615E-02	2.4740E-01	3.7484E-03
SR90	6.6835E+06	6.6173E+04	5.2787E+04	6.5984E+03	0.0000E+00	0.0000E+00
TC99	3.2624E+03	3.2301E+01	7.4126E+00	9.2658E-01	2.9519E+00	4.4726E-02
TH229	1.6557E-05	1.6393E-07	7.9368E-10	9.9210E-11	1.5392E-07	2.3321E-09
TH230	1.8455E-03	1.8272E-05	6.4018E-08	8.0023E-09	7.4852E-06	1.1341E-07
TH232	2.1597E-07	2.1383E-09	1.5162E-11	1.8953E-12	2.7727E-07	4.2010E-09
U233	1.0444E-02	1.0341E-04	6.8136E-06	8.5170E-07	6.4309E-05	9.7438E-07
U234	8.2914E+02	8.2093E+00	6.4018E-03	8.0023E-04	3.2330E-02	4.8985E-04
U235	3.5538E+01	0.0000E+00	6.1023E-02	7.6279E-03	2.0558E+00	3.1148E-02
U236	1.3862E+02	1.3724E+00	2.5121E-01	3.1401E-02	1.1280E+02	1.7092E+00
U238	6.5690E+02	6.5040E+00	1.1231E-03	1.4039E-04	9.3477E-01	1.4163E-02
ZR93	4.2693E+02	4.2270E+00	1.1306E+00	1.4133E-01	4.3576E-01	6.6024E-03

Table D-1. (continued).

	TSPA Category	TSPA Category	TSPA Category	TSPA Category	TSPA Category	TSPA Category
2,333 MTHM SNF, no HLW	4	4	5	5	6	6
	MTHM	packages	MTHM	packages	MTHM	packages
Hanford	17.06	19	0.15	1		
INEEL	75.00	183	78.03	380		
SRS			3.01	261	8.15	659
Total	92.06	202	81.18	642	8.15	659
	total curies	Ci/pkg	total curies	Ci/pkg	total curies	Ci/pkg
Isotopes						
AC227	3.6165E-02	1.7904E-04	1.0570E-02	1.6465E-05	2.4022E-04	3.6452E-07
AM241	3.3074E+05	1.6373E+03	5.6705E+03	8.8326E+00	2.3118E+03	3.5081E+00
AM242M	5.5682E+02	2.7565E+00	1.0965E+01	1.7080E-02	1.5904E+00	2.4133E-03
AM243	1.7726E+03	8.7754E+00	1.7371E+01	2.7057E-02	1.7161E+00	2.6041E-03
C14	2.1813E+01	1.0798E-01	8.3775E-01	1.3049E-03	6.9531E-04	1.0551E-06
CL36	7.3802E-02	3.6535E-04	1.3193E-02	2.0549E-05	0.0000E+00	0.0000E+00
CM244	7.4871E+04	3.7065E+02	7.2145E+02	1.1237E+00	1.4683E+01	2.2281E-02
CM245	3.0509E+01	1.5103E-01	2.9282E-01	4.5610E-04	1.2449E-03	1.8891E-06
CM246	5.1757E+00	2.5622E-02	4.9649E-02	7.7335E-05	5.9997E-05	9.1042E-08
CS135	3.7658E+01	1.8643E-01	1.6923E+01	2.6360E-02	1.9723E+01	2.9928E-02
CS137	6.1554E+06	3.0472E+04	2.7919E+06	4.3488E+03	2.6847E+06	4.0739E+03
I129	3.7870E+00	1.8748E-02	5.8318E-01	9.0838E-04	1.2785E+00	1.9400E-03
NB93M	1.4340E+02	7.0992E-01	8.5684E+00	1.3346E-02	1.0819E+01	1.6417E-02
NB94	1.5675E+00	7.7601E-03	3.2573E-02	5.0737E-05	2.1655E-03	3.2861E-06
NI 59	2.0025E+01	9.9136E-02	1.8142E-01	2.8259E-04	0.0000E+00	0.0000E+00
NI 63	6.3188E+04	3.1281E+02	1.9730E+01	3.0732E-02	1.5922E-19	2.4161E-22
NP237	3.8126E+01	1.8874E-01	2.3738E+00	3.6976E-03	8.1581E+00	1.2379E-02
PA231	6.3506E-02	3.1439E-04	1.9780E-02	3.0811E-05	2.9088E-03	4.4140E-06
PB210	1.9125E-05	9.4676E-08	4.0652E-06	6.3320E-09	1.4540E-08	2.2064E-11
PD107	1.0256E+01	5.0772E-02	6.4096E-01	9.9838E-04	6.4771E-01	9.8287E-04
PU238	2.4513E+05	1.2135E+03	4.4698E+03	6.9623E+00	1.2058E+04	1.8298E+01
PU239	3.2852E+04	1.6263E+02	9.7319E+03	1.5159E+01	1.6715E+03	2.5365E+00
PU240	5.0960E+04	2.5228E+02	3.4232E+03	5.3321E+00	8.6832E+02	1.3176E+00
PU241	2.9837E+06	1.4771E+04	2.2711E+05	3.5375E+02	4.3840E+04	6.6525E+01
PU242	1.9533E+02	9.6700E-01	2.3523E+00	3.6640E-03	6.8895E-01	1.0454E-03
RA226	5.5556E-05	2.7503E-07	1.5413E-05	2.4007E-08	2.6621E-07	4.0397E-10
RA228	2.8681E-02	1.4199E-04	8.5944E-03	1.3387E-05	5.1139E-10	7.7601E-13
SE79	4.0622E+01	2.0110E-01	1.2457E+01	1.9404E-02	3.4695E+01	5.2647E-02
SM151	1.1228E+05	5.5583E+02	1.9103E+04	2.9756E+01	2.9061E+04	4.4099E+01
SN126	5.1246E+01	2.5369E-01	9.0356E+00	1.4074E-02	1.1609E+01	1.7616E-02
SR90	4.5345E+06	2.2448E+04	2.5053E+06	3.9023E+03	2.5842E+06	3.9215E+03
TC99	1.4037E+03	6.9491E+00	3.2257E+02	5.0245E-01	7.1981E+02	1.0923E+00
TH229	8.5249E-02	4.2203E-04	2.4689E-02	3.8457E-05	1.5327E-06	2.3258E-09
TH230	7.8919E-03	3.9069E-05	2.2652E-03	3.5284E-06	1.2597E-04	1.9115E-07
TH232	3.0212E-02	1.4956E-04	9.0632E-03	1.4117E-05	1.3146E-08	1.9948E-11
U233	3.3056E+01	1.6364E-01	9.4539E+00	1.4726E-02	1.8473E-03	2.8032E-06
U234	3.5459E+01	1.7554E-01	8.1979E+00	1.2769E-02	1.5250E+00	2.3141E-03
U235	3.6199E+00	1.7920E-02	9.3301E+00	1.4533E-02	1.2560E+01	1.9059E-02
U236	2.9336E+01	1.4523E-01	9.0123E+00	1.4038E-02	2.5620E+01	3.8878E-02
U238	2.7604E+01	1.3665E-01	2.6256E+01	4.0898E-02	6.2237E-01	9.4441E-04
ZR93	1.9506E+02	9.6565E-01	3.8990E+01	6.0732E-02	7.0831E+01	1.0748E-01

Table D-1. (continued).

	TSPA Category	TSPA Category	TSPA Category	TSPA Category	TSPA Category	TSPA Category
2,333 MTHM SNF, no HLW	7	7	8	8	9	9
	MTHM	packages	MTHM	packages	MTHM	packages
Hanford						
INEEL			23.01	470	1.55	56
SRS	10.78	201				
Total	10.78	201	23.01	470	1.55	56
	total curies	Ci/pkg	total curies	Ci/pkg	total curies	Ci/pkg
Isotopes						
AC227	4.7185E-05	2.3475E-07	0.0000E+00	0.0000E+00	1.5820E-01	2.8250E-03
AM241	7.6220E+03	3.7920E+01	1.7420E+03	3.7065E+00	1.4859E+02	2.6533E+00
AM242M	2.7496E+00	1.3679E-02	4.7175E-01	1.0037E-03	7.6154E-02	1.3599E-03
AM243	7.4983E+00	3.7305E-02	1.2450E+01	2.6489E-02	7.3827E-02	1.3183E-03
C14	3.6656E-03	1.8237E-05	1.0102E+02	2.1495E-01	2.0938E+00	3.7390E-02
CL36	0.0000E+00	0.0000E+00	1.2680E+00	2.6978E-03	5.9403E-02	1.0608E-03
CM244	6.2202E+01	3.0946E-01	3.9121E+02	8.3236E-01	1.9387E+00	3.4620E-02
CM245	4.1572E-03	2.0683E-05	6.5355E-02	1.3905E-04	2.2334E-04	3.9883E-06
CM246	3.0676E-04	1.5261E-06	3.2447E-02	6.9037E-05	7.2742E-06	1.2990E-07
CS135	3.9278E+00	1.9541E-02	8.1004E+00	1.7235E-02	1.4765E+00	2.6367E-02
CS137	1.7009E+06	8.4624E+03	1.1253E+06	2.3943E+03	1.0454E+05	1.8667E+03
I129	7.9505E-01	3.9555E-03	9.6882E-01	2.0613E-03	4.0946E-02	7.3118E-04
NB93M	6.5719E+00	3.2696E-02	4.3263E+00	9.2049E-03	2.5902E+00	4.6253E-02
NB94	1.5530E-03	7.7264E-06	6.2133E-02	1.3220E-04	2.7453E-02	4.9023E-04
NI 59	0.0000E+00	0.0000E+00	8.0773E+00	1.7186E-02	8.1737E-02	1.4596E-03
NI 63	0.0000E+00	0.0000E+00	1.9399E+02	4.1275E-01	8.4219E+00	1.5039E-01
NP237	3.7425E+00	1.8619E-02	7.6171E+00	1.6207E-02	4.1256E-01	7.3672E-03
PA231	5.9294E-04	2.9500E-06	8.7217E+00	1.8557E-02	2.6987E-01	4.8192E-03
PB210	2.4270E-09	1.2075E-11	2.1448E-03	4.5633E-06	1.4564E-05	2.6007E-07
PD107	7.3733E-01	3.6683E-03	4.0732E-01	8.6664E-04	2.6677E-02	4.7638E-04
PU238	5.8767E+03	2.9237E+01	3.7970E+04	8.0788E+01	1.0283E+03	1.8363E+01
PU239	4.6624E+03	2.3196E+01	1.0540E+02	2.2425E-01	2.2955E+01	4.0991E-01
PU240	3.3342E+03	1.6588E+01	1.7743E+02	3.7750E-01	1.7992E+01	3.2128E-01
PU241	1.4617E+05	7.2720E+02	0.0000E+00	0.0000E+00	1.6751E+03	2.9912E+01
PU242	3.2553E+00	1.6195E-02	0.0000E+00	0.0000E+00	2.3730E-02	4.2375E-04
RA226	4.7417E-08	2.3590E-10	2.2782E-03	4.8473E-06	5.2269E-05	9.3337E-07
RA228	2.3828E-10	1.1855E-12	3.0606E+00	6.5120E-03	1.3339E-01	2.3819E-03
SE79	2.1699E+01	1.0795E-01	1.3784E+01	2.9329E-02	7.5378E-01	1.3460E-02
SM151	7.1994E+03	3.5818E+01	2.1125E+04	4.4948E+01	1.4254E+03	2.5453E+01
SN126	8.5209E+00	4.2393E-02	6.4895E+00	1.3807E-02	6.9640E-01	1.2436E-02
SR90	1.5885E+06	7.9030E+03	1.0563E+06	2.2474E+03	9.8954E+04	1.7670E+03
TC99	4.5268E+02	2.2521E+00	3.4749E+02	7.3933E-01	2.2645E+01	4.0437E-01
TH229	2.5302E-07	1.2588E-09	1.3002E+01	2.7664E-02	3.8310E-01	6.8410E-03
TH230	2.4907E-05	1.2392E-07	8.9058E-01	1.8948E-03	7.3827E-03	1.3183E-04
TH232	6.2263E-09	3.0977E-11	2.3703E+00	5.0431E-03	1.4052E-01	2.5093E-03
U233	3.6792E-04	1.8304E-06	3.2217E+03	6.8547E+00	1.4657E+02	2.6173E+00
U234	3.6714E-01	1.8266E-03	2.6234E+02	5.5817E-01	2.4351E+01	4.3483E-01
U235	2.6725E+00	1.3296E-02	1.0125E+00	2.1543E-03	3.7844E-01	6.7579E-03
U236	1.2392E+01	6.1652E-02	9.9644E+00	2.1201E-02	9.5541E-01	1.7061E-02
U238	3.2699E+00	1.6268E-02	2.5083E-02	5.3369E-05	3.9550E-03	7.0626E-05
ZR93	4.3768E+01	2.1775E-01	5.0397E+02	1.0723E+00	3.5828E+00	6.3979E-02

Table D-1. (continued).

	TSPA Category	TSPA Category	TSPA Category	TSPA Category	TSPA Category	TSPA Category
2,333 MTHM SNF, no HLW	10	10	11	11	12	12
	MTHM	packages	MTHM	packages	MTHM	packages
Hanford	0.07	2	9.54	303		
INEEL	0.07	3	1.95	41	46.30	67
SRS						
Total	0.14	5	11.49	344	46.30	67
	total curies	Ci/pkg	total curies	Ci/pkg	total curies	Ci/pkg
Isotopes						
AC227	4.1494E-08	8.2988E-09	5.1412E-07	1.4945E-09	2.8429E+01	4.2431E-01
AM241	1.0951E+03	2.1902E+02	1.4758E+05	4.2901E+02	5.5099E+01	8.2237E-01
AM242M	1.9101E+00	3.8202E-01	2.5600E+02	7.4418E-01	5.7877E-01	8.6383E-03
AM243	3.1305E-02	6.2609E-03	6.1634E+01	1.7917E-01	1.1020E-01	1.6447E-03
C14	6.7410E-05	1.3482E-05	3.3962E-01	9.8727E-04	4.4264E+01	6.6066E-01
CL36	0.0000E+00	0.0000E+00	3.5869E-03	1.0427E-05	9.8622E-01	1.4720E-02
CM244	1.2920E+00	2.5840E-01	2.5894E+03	7.5273E+00	1.0603E+01	1.5825E-01
CM245	6.5878E-05	1.3176E-05	1.0602E+00	3.0819E-03	2.1947E-03	3.2756E-05
CM246	4.5348E-06	9.0697E-07	1.7996E-01	5.2314E-04	1.4492E-04	2.1630E-06
CS135	6.3324E-02	1.2665E-02	1.0954E+00	3.1842E-03	1.3288E+01	1.9834E-01
CS137	7.0071E+04	1.4014E+04	1.3696E+06	3.9814E+03	1.6437E+05	2.4533E+03
I129	1.3431E-02	2.6862E-03	1.2277E-01	3.5689E-04	7.3156E-01	1.0919E-02
NB93M	7.1495E-02	1.4299E-02	4.3220E+00	1.2564E-02	2.0373E+01	3.0407E-01
NB94	1.3482E-05	2.6964E-06	6.5155E-03	1.8941E-05	1.0279E+00	1.5342E-02
NI 59	0.0000E+00	0.0000E+00	7.0021E-01	2.0355E-03	3.3893E+00	5.0586E-02
NI 63	2.3152E+01	4.6304E+00	2.9668E+03	8.6245E+00	4.1301E+02	6.1643E+00
NP237	1.7345E-01	3.4690E-02	2.2103E+00	6.4252E-03	4.6764E-02	6.9798E-04
PA231	1.8931E-06	3.7862E-07	4.2507E-05	1.2357E-07	7.1767E+01	1.0712E+00
PB210	7.0985E-12	1.4197E-12	1.0602E-07	3.0819E-10	5.1858E-03	7.7399E-05
PD107	9.3965E-03	1.8793E-03	3.4983E-01	1.0170E-03	1.5881E-01	2.3704E-03
PU238	5.1577E+02	1.0315E+02	2.7090E+04	7.8749E+01	1.8243E+02	2.7228E+00
PU239	8.7962E+02	1.7592E+02	1.0946E+05	3.1821E+02	1.1807E+01	1.7622E-01
PU240	7.5835E+02	1.5167E+02	9.5197E+04	2.7674E+02	6.7600E+00	1.0090E-01
PU241	8.0133E+03	1.6027E+03	8.8553E+05	2.5742E+03	1.6067E+03	2.3980E+01
PU242	7.5782E-03	1.5156E-03	6.7836E+00	1.9720E-02	1.5141E-02	2.2598E-04
RA226	1.0523E-08	2.1046E-09	1.8186E-06	5.2866E-09	2.9818E-03	4.4505E-05
RA228	3.2121E-12	6.4243E-13	6.8957E-09	2.0046E-11	4.6764E+00	6.9798E-02
SE79	2.4257E-01	4.8515E-02	1.2469E+00	3.6249E-03	1.6298E+01	2.4326E-01
SM151	8.5300E+02	1.7060E+02	8.2785E+04	2.4065E+02	6.0192E+03	8.9838E+01
SN126	2.1704E-01	4.3408E-02	1.6307E+00	4.7405E-03	1.8289E+01	2.7297E-01
SR90	6.1409E+04	1.2282E+04	5.3486E+05	1.5548E+03	1.6900E+05	2.5224E+03
TC99	8.1709E+00	1.6342E+00	4.3407E+01	1.2618E-01	1.5141E+02	2.2598E+00
TH229	1.1407E-09	2.2814E-10	5.7799E-07	1.6802E-09	1.2038E+01	1.7968E-01
TH230	2.3787E-06	4.7575E-07	3.9722E-04	1.1547E-06	4.5561E-01	6.8001E-03
TH232	2.0328E-11	4.0655E-12	1.8673E-08	5.4283E-11	5.5562E+00	8.2928E-02
U233	8.0011E-06	1.6002E-06	3.1714E-04	9.2192E-07	7.8249E+03	1.1679E+02
U234	2.2943E-02	4.5885E-03	2.7207E+00	7.9090E-03	3.8847E+02	5.7980E+00
U235	6.7436E-02	1.3487E-02	7.3490E-02	2.1363E-04	2.6160E-02	3.9045E-04
U236	2.8151E-01	5.6302E-02	1.4092E+00	4.0964E-03	5.3710E-02	8.0164E-04
U238	1.2358E-03	2.4717E-04	9.2919E-01	2.7011E-03	8.5195E-04	1.2716E-05
ZR93	1.2461E+00	2.4921E-01	5.8031E+00	1.6870E-02	3.8013E+01	5.6736E-01

Table D-1. (continued).

	TSPA Category	TSPA Category	TSPA Category	TSPA Category		
2,333 MTHM SNF, no HLW	13	13	16	16		
	MTHM	packages	MTHM	packages		
Hanford	0.03	3	0.15	5	sum MTHM Hanf	1989.45
INEEL	1.86	91	7.14	37	sum MTHM INEEL	303.04
SRS			2.72		sum MTHM SRS	40.51
Total	1.89	94	10.01	42	sum MTHM cmplx	2333
						complex
	total curies	Ci/pkg	total curies	Ci/pkg		total curies
Isotopes						
AC227	5.2604E-06	5.5962E-08	2.9322E-05	6.9815E-07	AC227	2.8644E+01
AM241	1.8921E+01	2.0129E-01	4.9749E+03	1.1845E+02	AM241	9.8298E+05
AM242M	2.1002E-01	2.2342E-03	6.6225E+00	1.5768E-01	AM242M	8.6593E+02
AM243	2.3272E-02	2.4757E-04	2.0797E+01	4.9518E-01	AM243	2.0125E+03
C14	7.9288E+00	8.4349E-02	7.3275E-02	1.7446E-03	C14	7.9683E+02
CL36	2.3843E-01	2.5365E-03	1.8151E-04	4.3216E-06	CL36	2.6432E+00
CM244	6.3377E-01	6.7422E-03	8.2008E+02	1.9526E+01	CM244	8.3072E+04
CM245	1.2940E-05	1.3766E-07	3.0651E-01	7.2978E-03	CM245	3.3761E+01
CM246	3.6322E-07	3.8640E-09	5.1617E-02	1.2290E-03	CM246	5.7147E+00
CS135	3.0086E+00	3.2006E-02	5.8646E+00	1.3963E-01	CS135	1.8613E+02
CS137	2.8572E+05	3.0396E+03	3.7407E+06	8.9063E+04	CS137	2.8620E+07
I129	6.7552E-02	7.1864E-04	9.9049E-01	2.3583E-02	I129	1.6255E+01
NB93M	6.6039E-01	7.0254E-03	7.0807E+00	1.6859E-01	NB93M	5.4915E+02
NB94	4.3331E-01	4.6097E-03	1.5034E-03	3.5795E-05	NB94	3.2199E+00
NI 59	4.6361E+01	4.9321E-01	3.5309E-02	8.4068E-04	NI 59	1.1404E+02
NI 63	5.7337E+03	6.0997E+01	4.3675E+00	1.0399E-01	NI 63	7.5838E+04
NP237	1.7993E-01	1.9142E-03	1.0304E+01	2.4534E-01	NP237	1.4586E+02
PA231	8.4017E-05	8.9380E-07	4.4752E-04	1.0655E-05	PA231	8.0872E+01
PB210	1.2752E-10	1.3566E-12	3.2265E-08	7.6822E-10	PB210	7.3686E-03
PD107	5.5820E-02	5.9383E-04	7.8318E-01	1.8647E-02	PD107	2.8122E+01
PU238	1.9867E+02	2.1135E+00	2.2670E+04	5.3977E+02	PU238	4.6332E+05
PU239	4.2389E+02	4.5094E+00	2.2283E+03	5.3054E+01	PU239	3.7968E+05
PU240	1.6501E+02	1.7554E+00	1.5649E+03	3.7259E+01	PU240	2.8488E+05
PU241	1.2299E+04	1.3085E+02	1.5108E+05	3.5972E+03	PU241	6.0838E+06
PU242	2.2894E-02	2.4355E-04	3.0135E+00	7.1751E-02	PU242	2.7946E+02
RA226	2.1191E-10	2.2544E-12	1.7687E-07	4.2112E-09	RA226	7.3406E-03
RA228	3.2552E-07	3.4629E-09	6.4237E-10	1.5295E-11	RA228	7.9077E+00
SE79	1.2035E+00	1.2803E-02	1.9938E+01	4.7472E-01	SE79	2.7246E+02
SM151	2.2329E+03	2.3755E+01	1.6110E+04	3.8356E+02	SM151	4.3684E+05
SN126	1.1145E+00	1.1857E-02	1.4350E+01	3.4166E-01	SN126	2.7080E+02
SR90	2.7248E+05	2.8987E+03	3.5681E+06	8.4955E+04	SR90	2.3710E+07
TC99	4.0497E+01	4.3082E-01	5.8221E+02	1.3862E+01	TC99	7.3674E+03
TH229	1.0710E-07	1.1394E-09	3.7239E-07	8.8665E-09	TH229	2.5533E+01
TH230	3.5950E-07	3.8245E-09	4.9831E-05	1.1865E-06	TH230	1.3662E+00
TH232	9.6321E-07	1.0247E-08	4.2075E-09	1.0018E-10	TH232	8.1062E+00
U233	5.2415E-04	5.5761E-06	6.8161E-04	1.6229E-05	U233	1.1236E+04
U234	1.9678E-02	2.0934E-04	7.7030E-01	1.8340E-02	U234	1.5534E+03
U235	9.2152E-01	9.8034E-03	5.0201E+00	1.1953E-01	U235	7.3337E+01
U236	1.2375E+00	1.3165E-02	1.9069E+01	4.5402E-01	U236	3.6100E+02
U238	5.3935E-01	5.7378E-03	1.0095E+00	2.4037E-02	U238	7.1810E+02
ZR93	7.2660E+00	7.7298E-02	8.0618E+01	1.9195E+00	ZR93	1.4176E+03

Table D-2. HLW Inventory.

Isotope	DHLW Inventory (Ci/pkg)[a]	Isotope	DHLW Inventory (Ci/pkg)[a]
^{227}Ac	2.41E-03	^{239}Pu	1.89E+01
^{241}Am	3.46E+02	^{240}Pu	1.32E+01
^{242m}Am	8.24E-02	^{241}Pu	5.92E+02
^{243}Am	1.47E-01	^{242}Pu	2.01E-02
^{14}C	0.00E+00	^{226}Ra	3.75E-07
^{36}Cl	0.00E+00	^{228}Ra	0.00E+00
^{244}Cm	4.56E+01	^{79}Se	3.67E-01
^{245}Cm	2.26E-04	^{151}Sm	0.00E+00
^{246}Cm	2.56E-05	^{126}Sn	0.00E+00
^{135}Cs	4.60E-01	^{99}Tc	1.32E+01
^{129}I	7.60E-06	^{229}Th	6.04E-05
^{93m}Nb	2.19E+00	^{230}Th	4.96E-05
^{94}Nb	1.21E-04	^{232}Th	4.20E-04
^{59}Ni	1.08E-01	^{233}U	2.34E-03
^{63}Ni	0.00E+00	^{234}U	2.00E-01
^{237}Np	1.13E-01	^{235}U	3.17E-04
^{231}Pa	3.90E-03	^{236}U	1.74E-03
^{210}Pb	1.09E-07	^{238}U	1.51E-02
^{107}Pd	0.00E+00	^{93}Zr	2.80E+00
^{238}Pu	1.60E+03		

a. Assumed 4 canisters per container.

Source: RW M&O 1995 TSPA x4 [Reference 31].