GA Technologies

ORNL/Sub/86-22047/3
GA-C18542

CHARACTERIZATION OF TRIGA FUEL

by
N. TOMSIO

Report prepared by
GA Technologies Inc.
P.O. Box 85608
San Diego, California 92138-5608
under Subcontract 86X-22047C
for Oak Ridge National Laboratory
Oak Ridge, Tennessee 37831
operated by
MARTIN MARIETTA ENERGY SYSTEMS, INC.
for the
U.S. DEPARTMENT OF ENERGY
under Contract DE-AC05-84OR21400

DISCLAIMER

This report was prepared as an account of work sponsored by an agency of the United States Government. Neither the United States Government nor any agency thereof, nor any of their employees, makes any warranty, express or implied, or assumes any legal liability or responsibility for the accuracy, completeness, or usefulness of any information, apparatus, product, or process disclosed, or represents that its use would not infringe privately owned rights. Reference herein to any specific commercial product, process, or service by trade name, trademark, manufacturer, or otherwise does not necessarily constitute or imply its endorsement, recommendation, or favoring by the United States Government or any agency thereof. The views and opinions of authors expressed herein do not necessarily state or reflect those of the United States Government or any agency thereof.

GA PROJECT 3442
OCTOBER 1986

MASTER

CONTENTS

SUMMARY 1-1
INTRODUCTION 2-1
DESCRIPTION OF SPENT FUEL 3-1
3.1. General Description 3-1
3.1.1. TRIGA Reactor Core 3-1
3.1.2. TRIGA Fuel 3-1
3.2. Fuel Types and Drawings 3-2
3.2.1. Aluminum Clad Element 3-4
3.2.2. Stainless Steel Clad Element 3-7
3.2.3. Incoloy 800 Clad Element 3-13
3.2.4. Fuel Follower Control Rod Element 3-18
3.3. Materials 3-21
3.3.1. Aluminum Clad Elements 3-21
3.3.2. Stainless Steel Clad Elements 3-22
3.3.3. Incoloy 800 Clad Elements 3-22
3.3.4. Fuel Follower Control Rod Elements 3-23
3.4. Weights 3-23
3.4.1. Assembly Weights 3-23
3.4.2. Component Weights 3-24
3.4.3. Material Weights 3-25
3.5. Postirradiation Condition of Spent Fuel 3-25
3.6. Packaging 3-29
3.6.1. Fuel Shipped by GA Technologies Inc. 3-29
3.6.2. Fuel Shipped by Westinghouse Hanford Company . . 3-31
CURRENT SPENT FUEL INVENTORY 4-1
BURNUP ANALYSIS AND ISOTOPIC COMPOSITION 5-1
5.1. Initial Heavy Metal Loadings 5-1
5.2. Fuel Burnup 5-1
5.3. Fuel Accountability 5-1
5.4. Fission Product Inventory 5-1

5.5. Radioactivity 5-3
5.6. Thermal Power 5-3
6. DOE OBLIGATIONS 6-1
7. REFERENCES 7-1
APPENDIX A: PACKING LISTS FOR 13 SHIPMENTS OF TRIGA SPENT FUEL FROM GA TECHNOLOGIES INC. TO THE IDAHO NATIONAL ENGINEERING LABORATORY A-1
APPENDIX B: SERIAL NUMBERS OF TRIGA FUEL ELEMENTS FROM THE MICHIGAN STATE TRIGA B-1
APPENDIX C: TRIGA SPENT FUEL SHIPMENT DATA FROM CORNELL UNIVERSITY C-1
APPENDIX D: SERIAL NUMBERS AND BURNUP DATA ON UNIVERSITY OF TEXAS TRIGA REACTOR SPENT FUEL SHIPPED TO THE IDAHO NATIONAL ENGINEERING LABORATORY D-1
APPENDIX E: SERIAL NUMBERS AND HEAVY METAL LOADINGS OF TRIGA SPENT FUEL FROM KANSAS STATE UNIVERSITY TO THE IDAHO NATIONAL ENGINEERING LABORATORY E-1
APPENDIX F: SERIAL NUMBERS AND HEAVY METAL LOADINGS OF TRIGA SPENT FUEL FROM WESTINGHOUSE HANFORD TO ROCKWELL HANFORD AND THE IDAHO NATIONAL ENGINEERING LABORATORY F-1
APPENDIX G: FISSION PRODUCT NUCLIDES G-1

FIGURES

3-1. Aluminum clad fuel element 3-5
3-2. Aluminum clad instrumented fuel element 3-6
3-3. Stainless steel clad fuel element with Type I-A fittings 3-8
3-4. Type II-A, III-A, and IV-A regular fittings 3-10
3-5. Stainless steel clad instrumented fuel element with Type I-B fittings 3-12
3-6. Type II-B, III-B, and IV-B instrumented fittings 3-15
3-7. Incoloy 800 clad fuel element 3-16
3-8. Incoloy 800 clad instrumented fuel element 3-17
3-9. Standard fuel follower control rod element 3-19
3-10. ACPR fuel follower control rod element 3-20
3-11. Fuel canister for damaged TRIGA elements 3-30

FIGURES (Continued)

5-1. Irradiated fuel element average activity 5-2
5-2. Gamma dose rate for a standard element operated at 1 watt 5-4
5-3. Gamma dose rate for a FLIP element operated at 1 watt 5-5
5-4. Gamma dose rate for a FLIP-LEU-I element operated at 1 watt 5-6
5-5. Decay heat for a standard SST fuel element 5-7

TABLES

1-1. United States TRIGA reactors 1-2
1-2. Foreign TRIGA reactors 1-3
3-1. TRIGA fuel types and drawings 3-3
3-2. Stainless steel clad fuel elements dimensions 3-9
3-3. Stainless steel clad fuel elements initial loadings 3-11
3-4. Fitting types for stainless steel clad instrumented fuel elements 3-14
3-5. Stainless steel clad fuel elements fuel section compositions 3-26
3-6. Fuel follower control rod elements fuel section compositions 3-27
4-1. Inventory of TRIGA spent fuel 4-2
4-2. At-reactor TRIGA spent fuel inventory 4-3
4-3. ICPP TRIGA spent fuel inventory 4-4
G-1. TRIGA spent fuel activity - 10 through 60 days G-1
G-2. TRIGA spent fuel activity - 150 days through 3 years . . . G-8
G-3. TRIGA spent fuel activity - 6 through 30 years G-15

1. SUMMARY (REF. 1)

This report provides a characterization of the existing TRIGA spent fuel. It includes a complete physical description, an inventory, and the nuclear characteristics of the fuel.

The inherently safe TRIGA* reactor is a light-water-cooled, graphite or water reflected reactor designed for training, research, and isotope production. TRIGA fuel has been shipped within the United States and also, to foreign countries. But since foreign countries have not shipped spent fuel directly back to a U.S. storage facility**, this report addresses only the U.S. TRIGA reactors. There are 31 reactors throughout the United States, of which four are now decommissioned (Tables 1-1 and 1-2).

To date, about 955 fuel elements are considered spent or damaged fuel. Six hundred sixty-five (665) spent fuel elements are currently stored at the Idaho National Engineering Laboratory (INEL) and about 290 fuel elements are currently stored within several different TRIGA reactor facility sites.

TRIGA reactors utilize solid fuel elements, developed by GA Technologies Inc. (GA), in which the zirconium-hydride moderator is homogeneously combined with the enriched uranium and loaded into cylindrical rods 1.5 in. in diameter and 30.0 in. long. The unique feature of these fuel-moderator elements is the prompt negative temperature coefficient of reactivity, which gives the TRIGA reactor its built-in

---

*TRIGA trademark registered in U.S. Patent Office.

**One known case involving a foreign country is a decommissioned reactor in Vietnam at the Institute of Nuclear Research, from which spent fuel has been shipped to a U.S. TRIGA reactor facility (Neutron Radiography Facility, Westinghouse Hanford Co.).

TABLE 1-1
UNITED STATES TRIGA REACTORS

COUNTRY	LOCATION	TRIGA MODEL	MAXIMUM RATING, kW(t) STEADY STATE	MAXIMUM RATING, kW(t) PULSING	INITIAL CRITICALITY
UNITED STATES					
Arizona	University of Arizona Tucson	Mark I	250	300,000	1958
California	GA Technologies San Diego	Mark I	250	800,000	1958
	GA Technologies San Diego	Mark F	1,500	8,400,000	1960
	GA Technologies San Diego	Mark III	Decommissioned		1966
	Norair Division of Northrop Corporation Hawthorne	Mark F	Decommissioned		1963
	University of California Berkeley	Mark III	1,000	2,000,000	1966
	University of California Irvine	Mark I	250	250,000	1969
	Aerostest Operations San Ramon	Conversion	250		1965
Colorado	U.S. Geological Survey Denver	Mark I	1,000	1,200,000	1969
Idaho	Argonne Nat'l. Lab-West (HFEF, INEL) Idaho Falls	Conversion	250		1977
Illinois	University of Illinois Urbana	Mark II	1,500	6,500,000	1960
	University of Illinois Urbana	LOPRA	10		1971
Kansas	Kansas State University Manhattan	Mark II	250	250,000	1962
Maryland	Harry Diamond Laboratories (U.S. Army) Forest Glen	Mark F	Decommissioned		1961
	AFFRI (DNA) Bethesda	Mark F	1,000	2,000,000	1962
	University of Maryland College Park	Conversion	250		1974
Michigan	The Dow Chemical Company Midland	Mark I	100		1967
	Michigan State University East Lansing	Mark I	250	250,000	1969
Nebraska	Veterans Administration Hospital Omaha	Mark I	18		1959
New Mexico	Sandia National Laboratories Albuquerque	ACPR	600	12,000,000	1967
New York	Cornell University Ithaca	Mark II	500	250,000	1962
Oregon	Oregon State University Corvallis	Mark II	1,000	3,200,000	1967
	Reed College Portland	Mark I	250		1968
Pennsylvania	Pennsylvania State University University Park	Mark III Conversion	1,000	2,000,000	1965
Puerto Rico	Puerto Rico Nuclear Center Mayaguez	Conversion	Decommissioned		1972
Texas	Texas A&M University College Station	Conversion	1,000	2,000,000	1968
	University of Texas Austin	Mark I	250	250,000	1963
Utah	University of Utah Salt Lake City	Mark I	250		1975
Washington	Washington State University Pullman	Conversion	1,000	2,000,000	1967
	Westinghouse-Hanford-300 Area Richland	Mark I	1,000		1977
Wisconsin	University of Wisconsin Madison	Conversion	1,000	2,000,000	1967

TABLE 1-2
FOREIGN TRIGA REACTORS

COUNTRY	LOCATION	TRIGA MODEL	MAXIMUM RATING, kW(t) STEADY STATE	MAXIMUM RATING, kW(t) PULSING	INITIAL CRITICALITY
NON-UNITED STATES					
Austria	Federal Ministry of Education Vienna	Mark II	250	250,000	1962
Bangladesh	Institute of Nuclear Technology Dhaka	Mark II	3,000	3,900,000	Under Construction
Brazil	University of Minas Gerais Belo Horizonte	Mark I	100		1960
England	Imperial Chemical Industries Billingham, Teesside	Mark I	250		1971
Finland	The State Institute for Technical Research Helsinki	Mark II	250	250,000	1962
Germany	University of Frankfurt Frankfurt	Conversion	Decommissioned		
	Medical College of Hanover Hanover	Mark I	250		1973
	German Cancer Research Center Heidelberg	Mark I	250		1966
	Johannes Gutenberg University Mainz	Mark II	100	250,000	1965
	Association for Radiation Research Munich	Mark III	Decommissioned		1972
Indonesia	National Atomic Energy Agency Bandung	Mark II	1,000		1964
	National Atomic Energy Agency Yogyakarta	Mark II	250		1979
Iran	Nuclear Research Center Tehran	Conversion	5,000/10,000		Suspended
Italy	University of Pavia Pavia	Mark II	250	250,000	1965
	National Committee for Nuclear Energy Rome	Mark II	1,000		1960
Japan	Japan Atomic Energy Research Institute Tokai-mura	ACPR	300	22,000,000	1975
	Musashi Institute of Technology Tokyo	Mark II	100		1963
	Rikkyo University Yokosuka	Mark II	100		1961
Korea	Korea Advanced Energy Research Institute Seoul	Mark II	250		1962
	Korea Advanced Energy Research Institute Seoul	Mark III	2,000	2,000,000	1972
Malaysia	Tun Ismail Atomic Research Centre Kuala Lumpur	Mark II	1,000	1,200,000	1982
Mexico	National Institute for Nuclear Research Mexico City	Mark III	1,000	2,000,000	1968
Morocco	Ministry of Energy and Mines Rabat	Mark I	100		Under Construction
Philippines	Philippine Atomic Energy Commission Quezon City	Conversion	3,000	1,000,000	Under Construction
Romania	Institute for Nuclear Power Reactors Pitesti	ACPR	500	15,000,000	1979
	Institute for Nuclear Power Reactors Pitesti	MPR 16	14,000		1979
Taiwan	National Tsing Hua University Taipei	Conversion	1,000		1977
Thailand	Office of Atomic Energy for Peace Bangkok	Mark III Conversion	1,000	1,200,000	1977
Turkey	Technical University of Instanbul Istanbul	Mark II	250	250,000	1979
Viet Nam	Institute of Nuclear Research Dalat	Mark II	Decommissioned		1963
Yugoslavia	Jozef Stefan Nuclear Institute Ljubljana	Mark II	500		1966
Zaire	Nuclear Science Commission Kinshasa	Mark II	1,000	1,000,000	1959

safety by automatically limiting the reactor power to a safe level in the event of a power excursion. The reactor core consists of a lattice of cylindrical fuel-moderator elements and graphite (dummy) elements. The fuel elements have graphite end sections that form the top and bottom reflector.

Detailed fuel accountability analysis on most of the individual spent fuel elements were performed by the reactor operators to meet DOE's buyback requirements and this data can be obtained from INEL. Fission product inventories, radioactivity levels, and thermal power output analyses were performed for an average or maximum power element and these results are included in the report.

Since there are 27 TRIGA reactors still operating in the U.S., any future projections of fuel discharges cannot be predicted because a majority of these reactors are sporadically operated, thus extending the lifetime of the fuel elements.

2. INTRODUCTION

GA is performing a characterization and treatment study of TRIGA spent fuel for DOE's Office of Civilian Radioactive Waste Management (OCRWM) under a contract with Martin Marietta Energy Systems at the Oak Ridge National Laboratory. The objectives of this program are to provide a detailed description of this fuel, determine the requirements for shipping this fuel to a final repository [or Monitored Retrievable Storage (MRS)], and identify treatment options which would facilitate its eventual disposal.

This report provides a detail description and a current inventory of the existing TRIGA spent fuel. Except for adjustments in heavy metal loadings, the physical description of the fresh fuel provided in this report will be applicable to all future spent fuel discharges from U.S. TRIGA reactors.

3. DESCRIPTION OF SPENT FUEL

3.1. GENERAL DESCRIPTION (REF. 1)

3.1.1. TRIGA Reactor Core

Surrounded by the graphite or water reflector, the core consists principally of a lattice of fuel elements, graphite dummy elements (optional) and control rods. The number of fuel elements within a reactor core varies depending upon the size of the reactor as shown below:

Reactor Size (kW)	Fuel Elements Required (average)
<100	60
<600	65
<1500	80
1500	90
2000	100

The TRIGA reactors use either a low enriched uranium (20%) or a high enriched uranium (70%) depending upon the reactor specifications. Since 1976, only low enriched uranium elements have been fabricated for TRIGA reactors.

3.1.2. TRIGA Fuel

The U.S. TRIGA fuel inventory is mainly made up of four basic types of fuel elements. These are aluminum clad elements, stainless steel clad elements, Incoloy 800 clad elements, and fuel follower control rod elements. All aluminum clad elements and stainless steel clad elements are 1.5-in.-diameter rods by 30. in. long including the end fittings. The Incoloy 800 clad elements are of the same length but with a smaller

diameter of 0.54 in. The fuel follower control rod elements are 1.5-in. diameter rods and range from 45.0 in. to 66.5 in. long.

The fuel is a solid, homogeneous mixture of uranium-zirconium hydride alloy. A 0.25-in. hole* is drilled through the center of the active fuel section to facilitate hydriding; a zirconium rod is inserted in this hole after hydriding is complete.

All fuel elements are clad with one of three materials: aluminum, stainless steel, or Incoloy 800. Aluminum, stainless-steel, or Inconel fittings are attached to both ends of the can. All closures are made by helic-arc welding.

The lower end fixture supports the fuel elements on the bottom grid plate. The upper end fixture consists of a knob for attachment of the fuel-handling tool and a triangular spacer which permits cooling water to flow through the upper grid plate. The length on most of these end fittings range from 3 in. to 4 in. The fittings on the Incoloy 800 clad elements are about 2.5 in. long.

Variations in fuel loading, external dimensions, and element components result in a number of variations of the four basic design types. Descriptions of these specific types along with sketches are provided in the following section.

3.2. FUEL TYPES AND DRAWINGS

Table 3-1 lists the ten variations of the four basic types of TRIGA fuel elements along with their corresponding drawing numbers. Seven of the ten variations of fuel types have corresponding instrumented fuel elements. These instrumented fuel elements have three temperature sensing thermocouples within the element. Each of the three thermocouples

*With the exception of the 14-in. aluminum clad element and the Incoloy 800 clad element.

TABLE 3-1
TRIGA FUEL TYPES AND DRAWINGS

	TRIGA Fuel Type	Fuel Element		Instrumented Fuel Element	
		Drawing No.	Fitting Type (if any)	Drawing No.	Fitting Type (if any)
1.	Aluminum Clad				
	Original - 14 in.	TOS210D160-F		TOS210D170-F	
	Original - 15 in.	TOS210D130-M		TOS210D170	
2.	Stainless Steel Clad				
	Standard-streamline	T13S210D210-ACDE	I-A	T13S210E220-CE	I-B
	Standard-plain	TOS210D210-R T	II-A	TOS210J220-T	II-B
	4 rod cluster	T4S210D105-F	III-A	T4S210J115-K H	III-B
	ACPR[a]	T5A210D210-A	IV-A	T5A210J220-A	IV-B
3.	Incoloy 800 clad	T14R210D210-ABCDE		T14R210E220-A BC	
4.	Fuel Follower Control rod				
	Present	TOS250D225-A BC		N/A	
	Prior to 1980	TOS250D205		N/A	
	ACPR	T5A250J105		N/A	

[a]Annular Core Pulsed Reactor.

are routed through the top end fitting and along an aluminum or stainless steel tubing several feet in length.

Each fuel element has a permanent serial number engraved on the top end fitting with the exception of the four rod cluster stainless steel clad element. The four rod cluster element has its serial number on the bottom end fitting. Serial numbers are approximately 0.25-in. numerals. The serial number is unique for each element and can be used to trace the entire fabrication history of the components within an element.

3.2.1. Aluminum Clad Element

The active part of each aluminum clad fuel element, shown in Fig. 3-1, is approximately 1.4 in. in diameter and 14 in. or 15 in. in length. The fuel contains about 8% by weight of uranium enriched to 20% U-235. The hydrogen-to-zirconium atom ratio is approximately 1.0.

Each element is clad with a 0.03-in.-thick aluminum can. Two sections of graphite are inserted in the can, one above and one below the fuel, to serve as top and bottom reflectors for the core. Then, aluminum end fixtures are attached to both ends of the can.

An instrumented fuel element will have three thermocouples embedded in the fuel. One or two instrumented elements are normally used in the reactor core to measure temperature. As shown in Fig. 3-2, thermocouple lead-out wires pass through a seal contained in an aluminum tube welded to the upper end fixture. This tube projects about 3 in. above the upper end of the element and is extended by two lengths of tubing connected by unions to provide a watertight conduit carrying the lead-out above the water surface in the reactor pool. Prior to shipment for storage, the tubing is removed from the element. The balance of the instrumented fuel element is identical to the standard element.

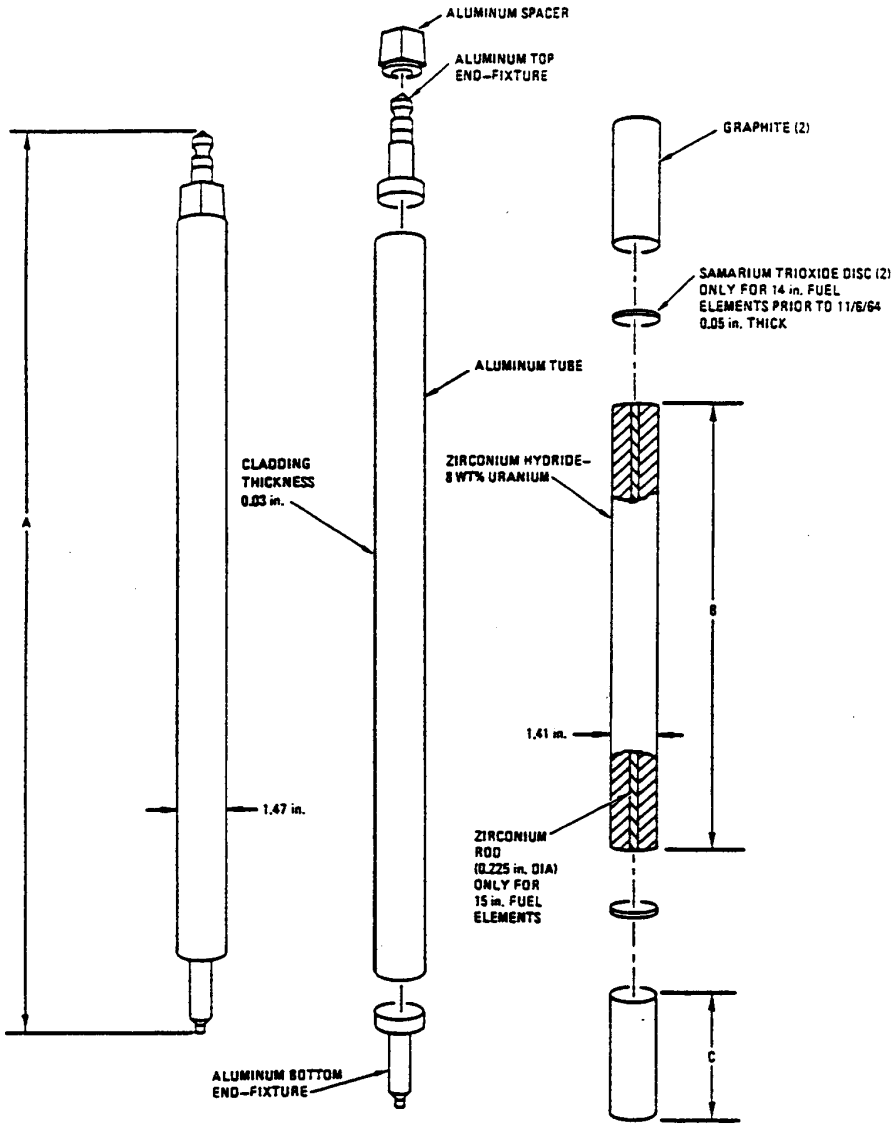

Drawing No.	TRIGA Fuel Type	A (in.)	B (in.)	C (in.)
TOS210D160	Original - 14 in.	28.37	14.0	3.95
TOS210D130	Original - 15 in.	28.3	15.0	3.53

Fig. 3-1. Aluminum clad fuel element

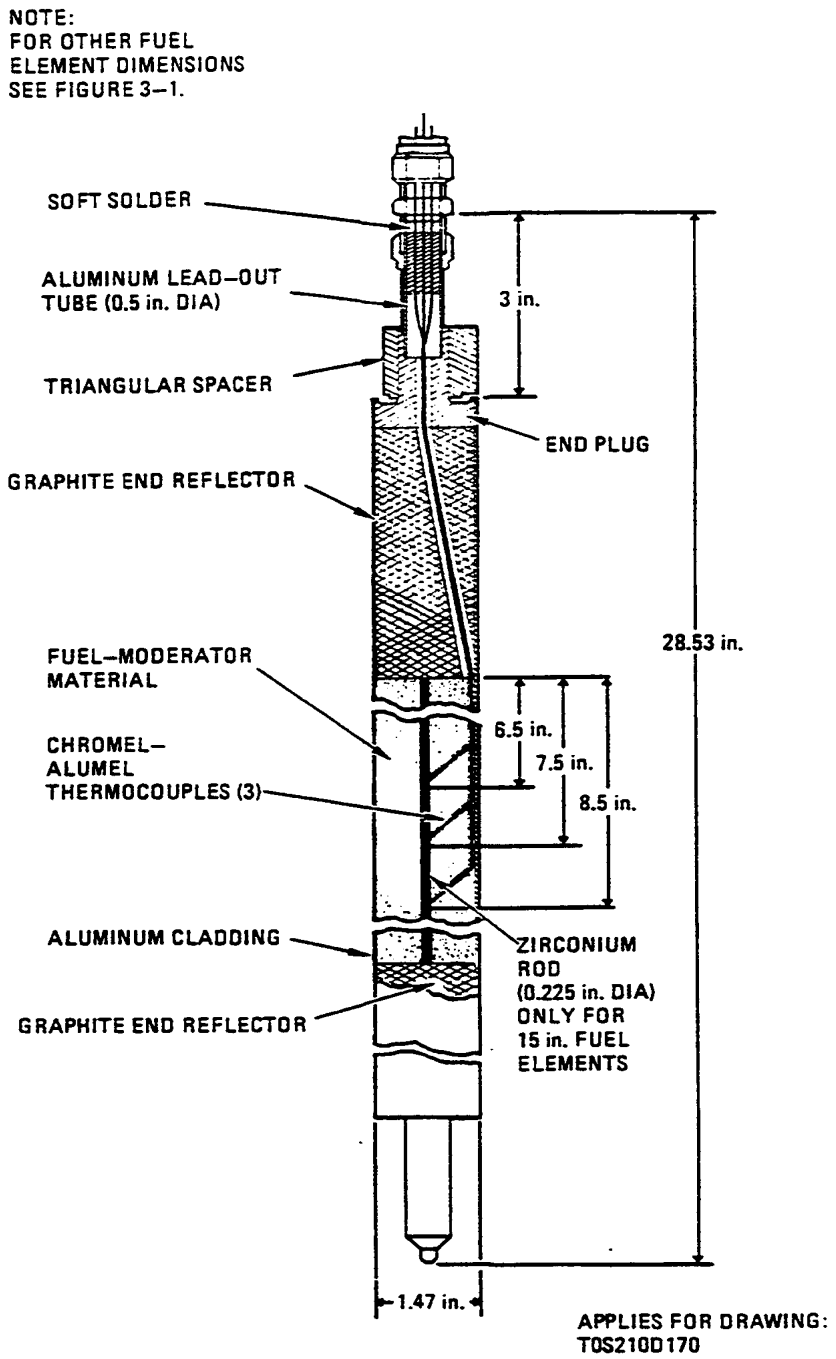

Fig. 3-2. Aluminum clad instrumented fuel element

3.2.2. Stainless Steel Clad Element

The stainless steel clad fuel element is currently the standard TRIGA element. Both the aluminum and the stainless steel clad elements are very similar in design. A variety of end fittings have been used on the stainless steel element.

The active part of each stainless steel clad fuel element, shown in Fig. 3-3 is approximately 1.4 in. in diameter and 15 in. long. Table 3-2 lists the four typical fitting types that are expected to be found on the stainless steel elements. Drawings of the other three fitting types not shown in Fig. 3-3 can be seen in Fig. 3-4.

Any of the types listed in Table 3-2 could have one of five variations of initial fuel loadings for the stainless steel clad elements as listed in Table 3-3 with the exception of the ACPR* fuel element. Serial numbers of the elements define initial loading which can be found from the shipping documents either at the reactor facilities or at the storage/waste facilities.

Each element is clad with a 0.02-in.-thick stainless steel can. Two sections of graphite are inserted in the can one above and one below the fuel, to serve as top and bottom reflectors for the core. Then, stainless steel end fixtures are attached to both ends of the can.

An instrumented fuel element will have three thermocouples embedded in the fuel. One or two instrumented elements are normally used in the reactor core to measured temperature. As shown in Fig. 3-5, the sensing tips of the fuel element thermocouples are located about two-thirds of the distance between the outer radius and the vertical centerline at the center of the fuel section and 1 in. above and below the horizontal midplane. The thermocouple lead-out wires pass through a seal contained

*Annular core pulsed reactor.

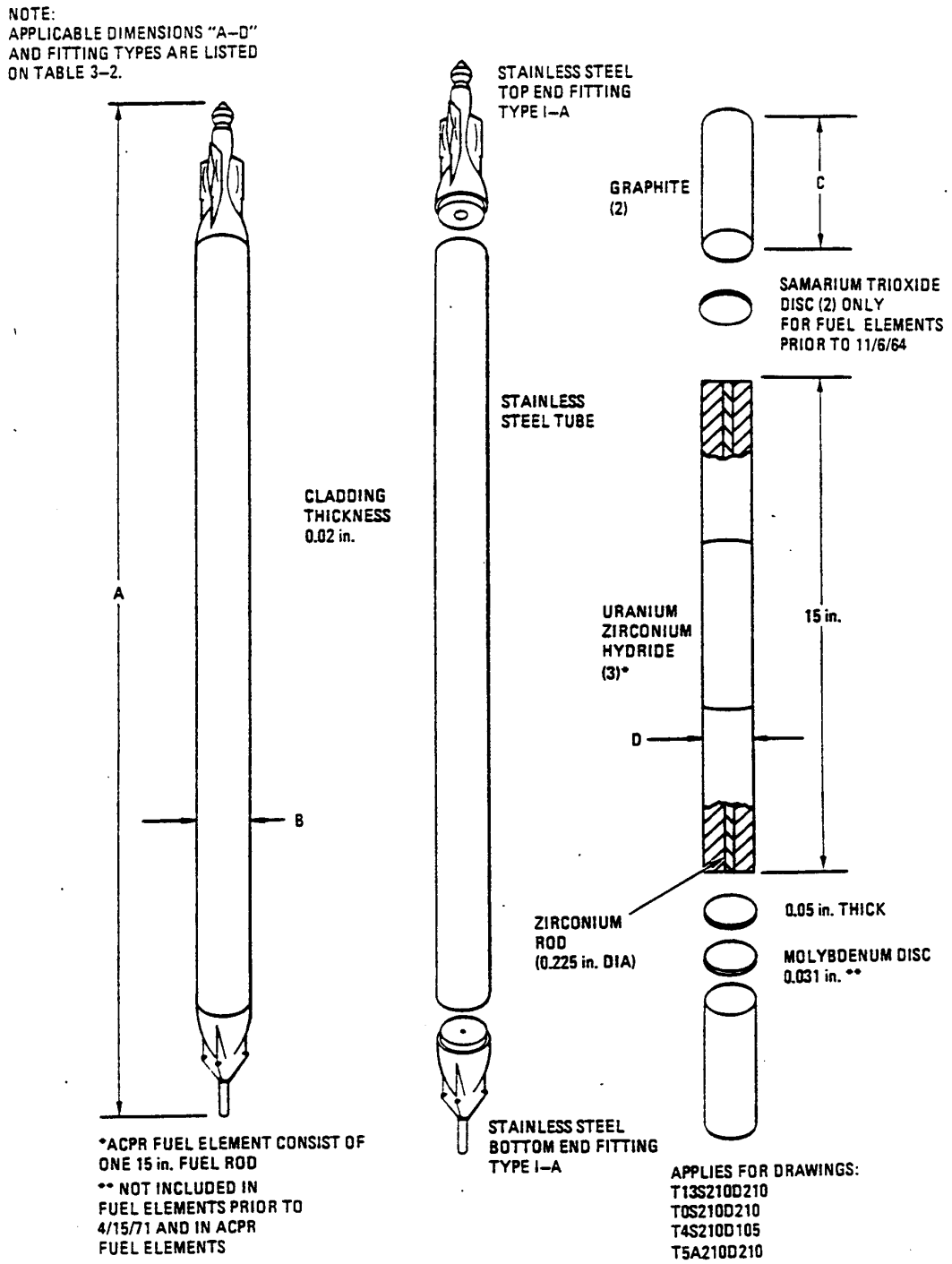

Fig. 3-3. Stainless steel clad fuel element with Type I-A fittings

TABLE 3-2
STAINLESS STEEL CLAD FUEL ELEMENTS DIMENSIONS

Drawing No.	TRIGA Fuel Type	Fitting Type[a]	A (in.)	B (in.)	C (in.)	D (in.)
T13S210D210	Standard-streamline	I-A	29.68	1.478	2.56[b]	1.435
T0S210D210	Standard-plain	II-A	28.9	1.478	3.42	1.435
T4S210D105	4 rod cluster	III-A	29.88	1.414	3.42	1.37
T5A210D210	ACPR[c]	IV-A	28.89	1.478	3.45	1.40

[a]See Fig. 3-4 for drawings of the various types.

[b]Lower graphite is longer than upper graphite. Lower graphite - 3.72 in.

[c]Annular Core Pulsed Reactor.

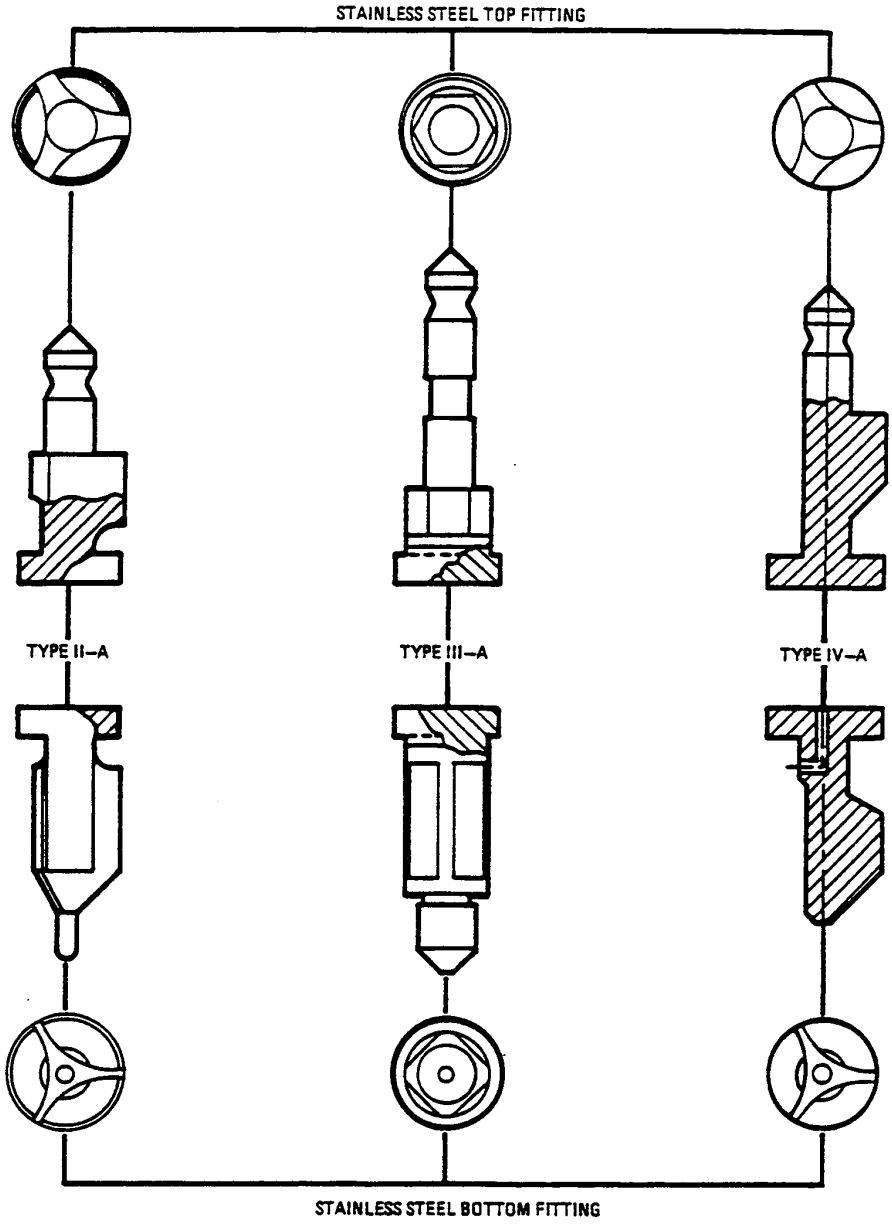

Fig. 3-4. Type II-A, III-A, and IV-A regular fittings

TABLE 3-3
STAINLESS STEEL CLAD FUEL ELEMENTS INITIAL LOADINGS[a]

Designation	Initial Uranium Content (wt %)	Initial Uranium Enrichment (%)	Hydrogen-to-Zirconium Atom Ratio
Standard - Prior to 11/6/64	8.0	20.0	1.0
Standard - 1965 and on	8.5 - 9.0	20.0	1.7
FLIP[b]	8.5	70.0	1.6
FLIP-LEU[c]-I	20.0	20.0	1.6
FLIP-LEU-II	30.0	20.0	1.6
ACPR[d]	12.0	20.0	1.7

[a]See Section 3.4.3 for uranium weights.

[b]Fuel Life Improvement Program.

[c]Low Enriched Uranium.

[d]Annular Core Pulsed Reactor. Loading applies only for TRIGA ACPR fuel type elements.

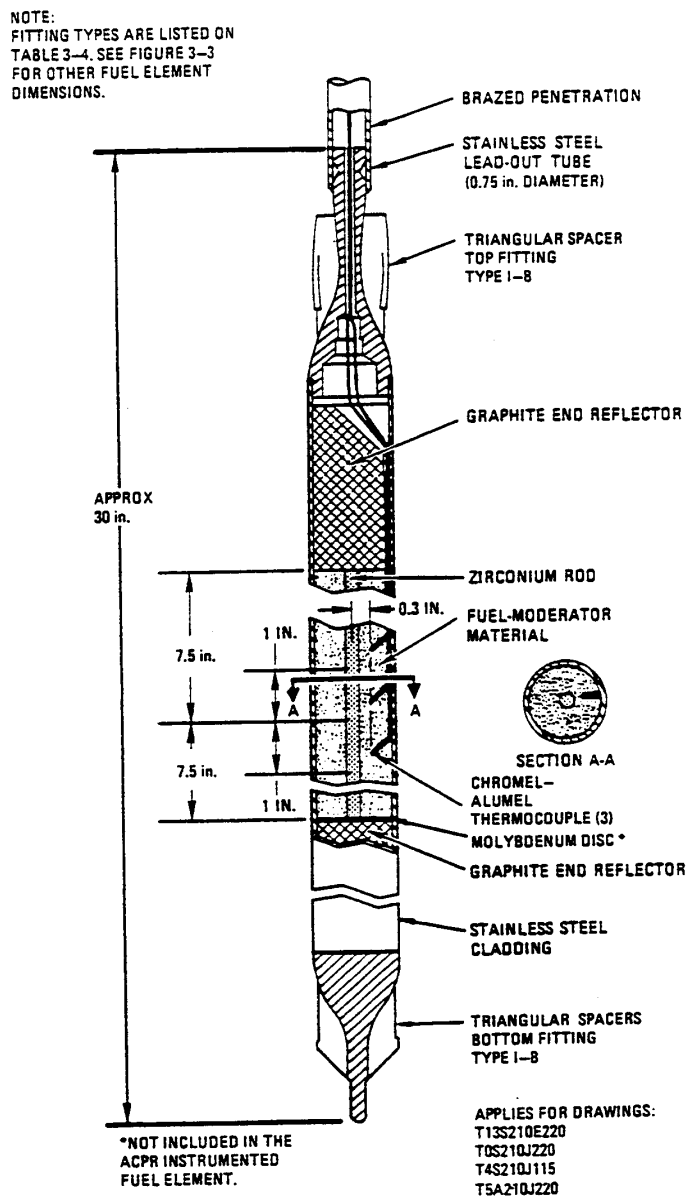

Fig. 3-5. Stainless steel clad instrumented fuel element Type I-B fittings

in a stainless steel tube welded to the upper end fixture. This tube projects about 3 in. above the upper end of the element and is extended by two lengths of tubing connected by unions to provide a watertight conduit carrying the lead-out wires above the water surface in the reactor pool. Prior to shipment for storage, the tubing is removed from the element. The balance of the instrumented fuel element is identical to the standard element.

Table 3-4 lists the four typical fitting types that are expected to be found on the instrumented stainless steel elements. Drawings on the other three fitting types not shown in Fig. 3-5 can be seen in Fig. 3-6.

3.2.3. Incoloy 800 Clad Element*

The active part of each Incoloy 800 clad fuel element, shown in Fig. 3-7, is a 0.51-in.-diameter and 22.0-in.-long fuel section divided into four pieces. The fuel contains about 45.0% by weight of uranium enriched to 20% U-235. The hydrogen-to-zirconium atom ratio is approximately 1.6.

Each element is clad with a 0.016-in.-thick Incoloy 800 can. There are no graphite reflectors within the element. Instead, a 3.0 spring is inserted at the top end of the element. Stainless steel end fixtures are attached to both ends of the can.

An instrumented fuel element will have three thermocouples embedded in the fuel. As shown in Fig. 3-8, thermocouple lead-out wires pass through a seal contained in a stainless steel tube welded to the upper end fixture. Prior to shipment for storage, the tubing is removed from

*Only a few were purchased in the U.S. by the Department of Energy for testing the Oak Ridge Research Reactor under the RERTR program managed by Argonne National Laboratories. Entire core loadings of 1.21 in. o.d. fuel elements were fabricated for reactors in Romania, Iran, and the Philippines.

TABLE 3-4
FITTING TYPES FOR STAINLESS STEEL CLAD
INSTRUMENTED FUEL ELEMENTS

Drawing No.	TRIGA Instrumented Fuel Type	Fitting Type[a]
T13S210E220	Standard-streamline	I-B
TOS210J220	Standard-plain	II-B
T4S210J115	4 rod cluster	III-B
T5A210J220	ACPR[b]	IV-B

[a]See Fig. 3-6 for drawings of the various types.

[b]Annular Core Pulsed Reactor.

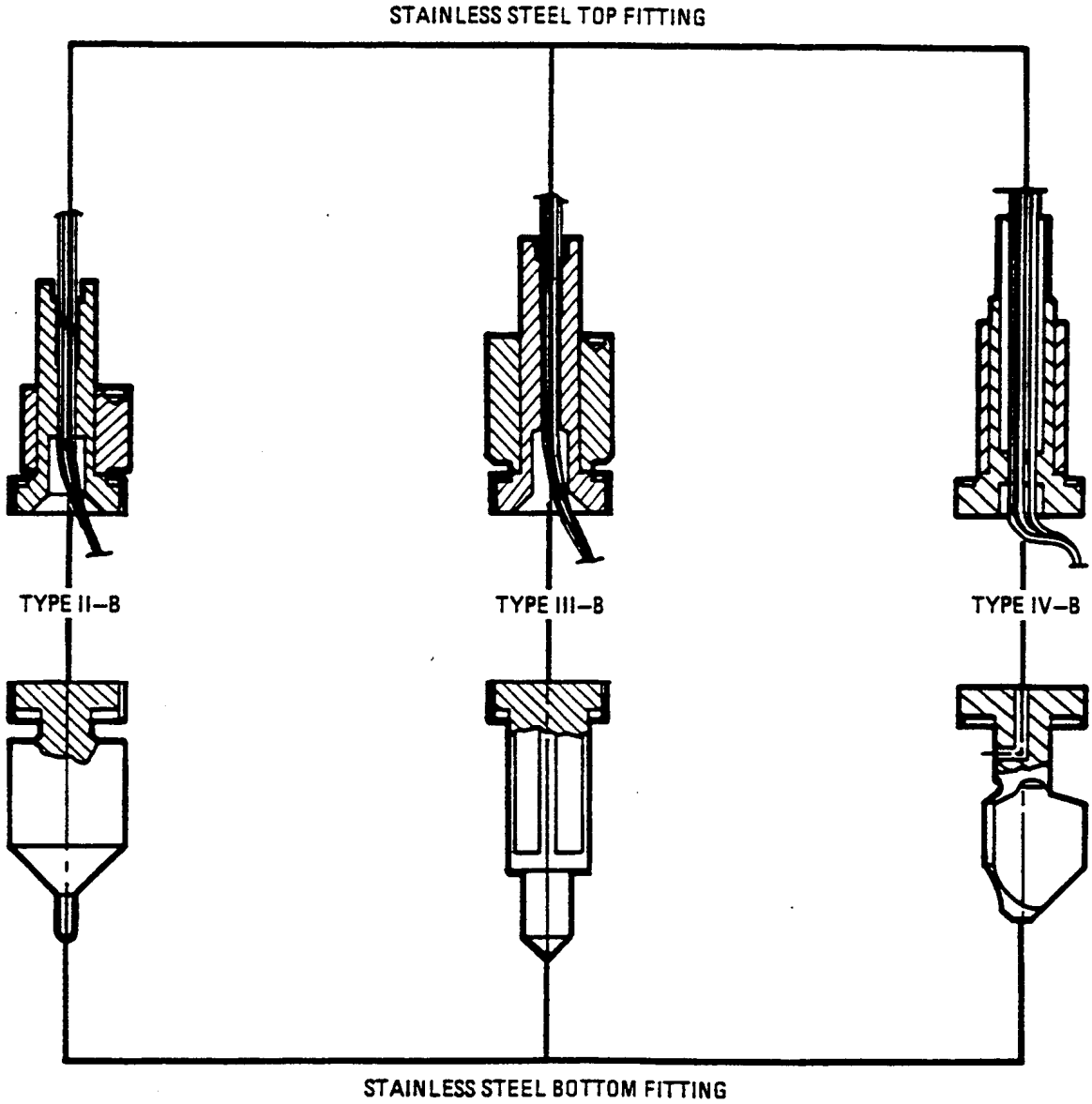

Fig. 3-6. Type II-B, III-B, and IV-B instrumented fittings

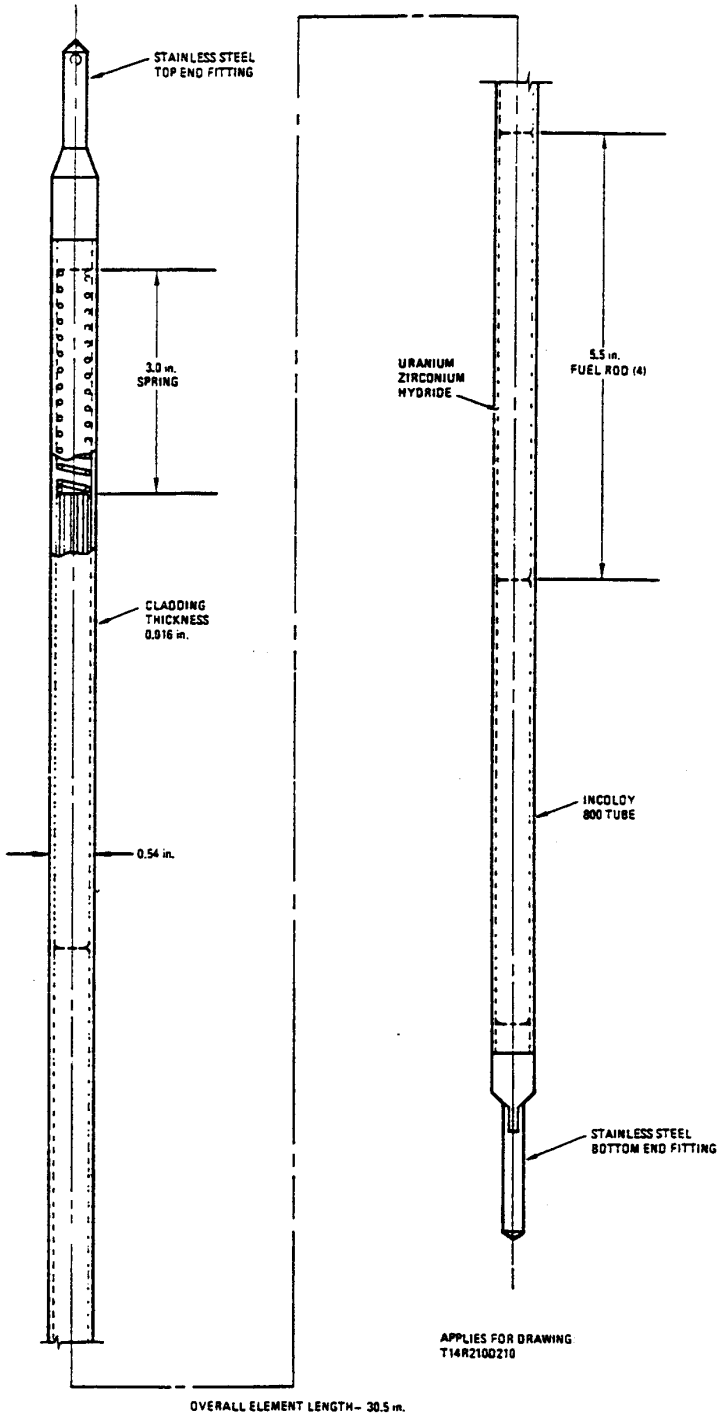

Fig. 3-7. Incoloy 800 clad fuel element

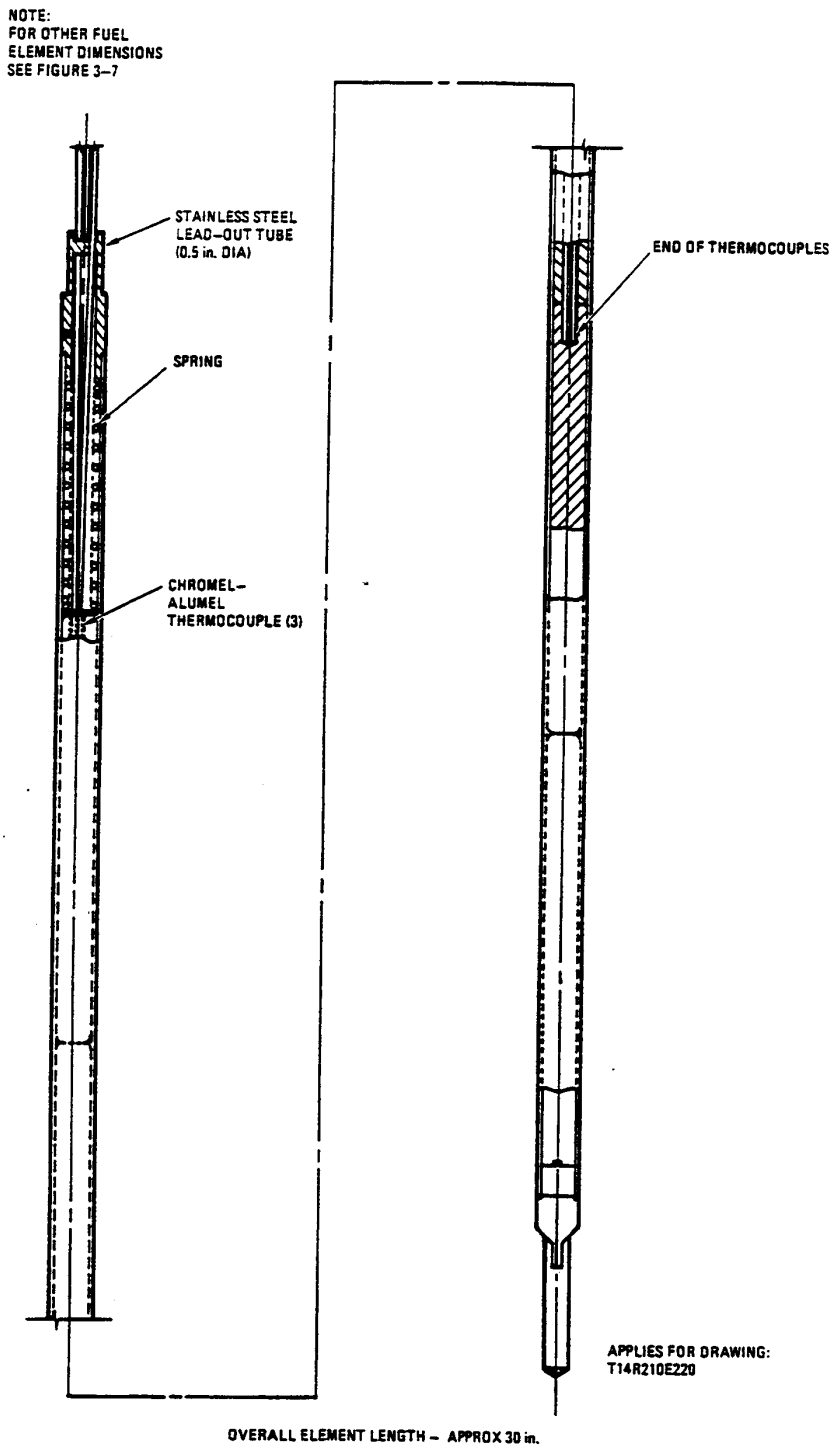

Fig. 3-8. Incoloy 800 clad instrumented fuel element

the element. The balance of the instrumented fuel element is identical to the standard element.

3.2.4. Fuel Follower Control Rod Element

A 1 MW reactor contains four to six fuel follower control rod (FFCR) elements; depending upon the reactor size. Reactors lower than 1 MW will use from zero to four FFCRs. There are three types of FFCRs; a safety rod, a regulating rod, and a shim rod. All three types are basically the same element but they each serve a different function within the core.

The standard FFCR elements shown in Fig. 3-9, are sealed Type 304 stainless steel tubes approximately 45 in. long by 1.35 in. in diameter. The uppermost 6.5-in. section is an air void and the next 15 in. is the neutron absorber (boron carbide in solid from). Immediately below the neutron absorber is a fuel follower section consisting of 15 in. of U-Zr $H_{1.6}$ fuel. The bottom section of the rod has a 6.5-in. air void.

There are two variations on the initial fuel loading for the fuel follower control rod elements:

Designation	Initial Uranium Content (wt %)	Initial Uranium Enrichment (%)
Standard	8.5	20.0
FLIP-LEU-I*	20.0	20.0

Serial numbers of the elements define initial loading which can be found from the shipping documents either at the reactor facilities or at the storage/waste facilities.

The ACPR FFCR element shown in Fig. 3-10, is a sealed Type 304 stainless steel tube approximately 66.5 in. long by 1.5 in. diameter.

*Fuel Life Improvement Program-Low Enriched Uranium-I.

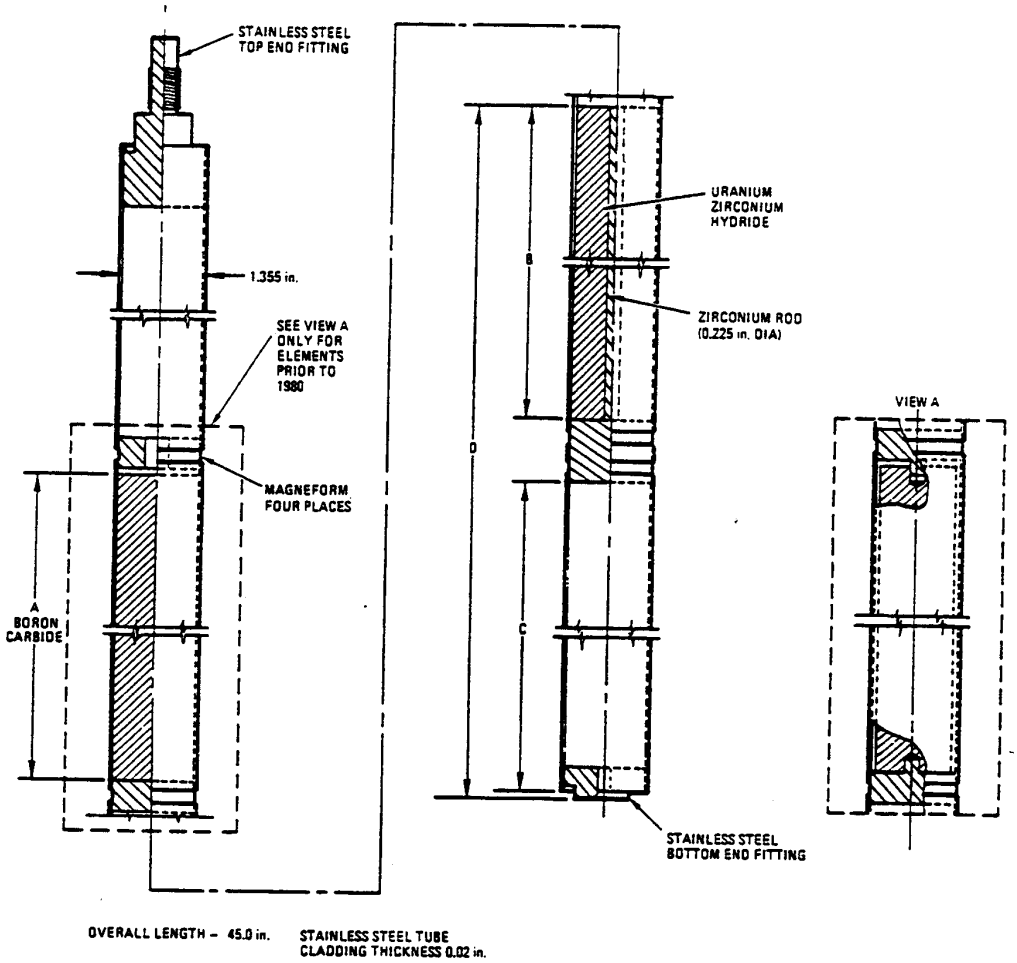

Drawing No.	TRIGA Fuel Type	A (in.)	B (in.)	C (in.)	D (in.)
TOS250D225	Present	15.0	15.0	5.88	22.06
TOS250D205	Prior to 1980	14.25	15.0	6.0	22.03

Fig. 3-9. Standard fuel follower control rod element

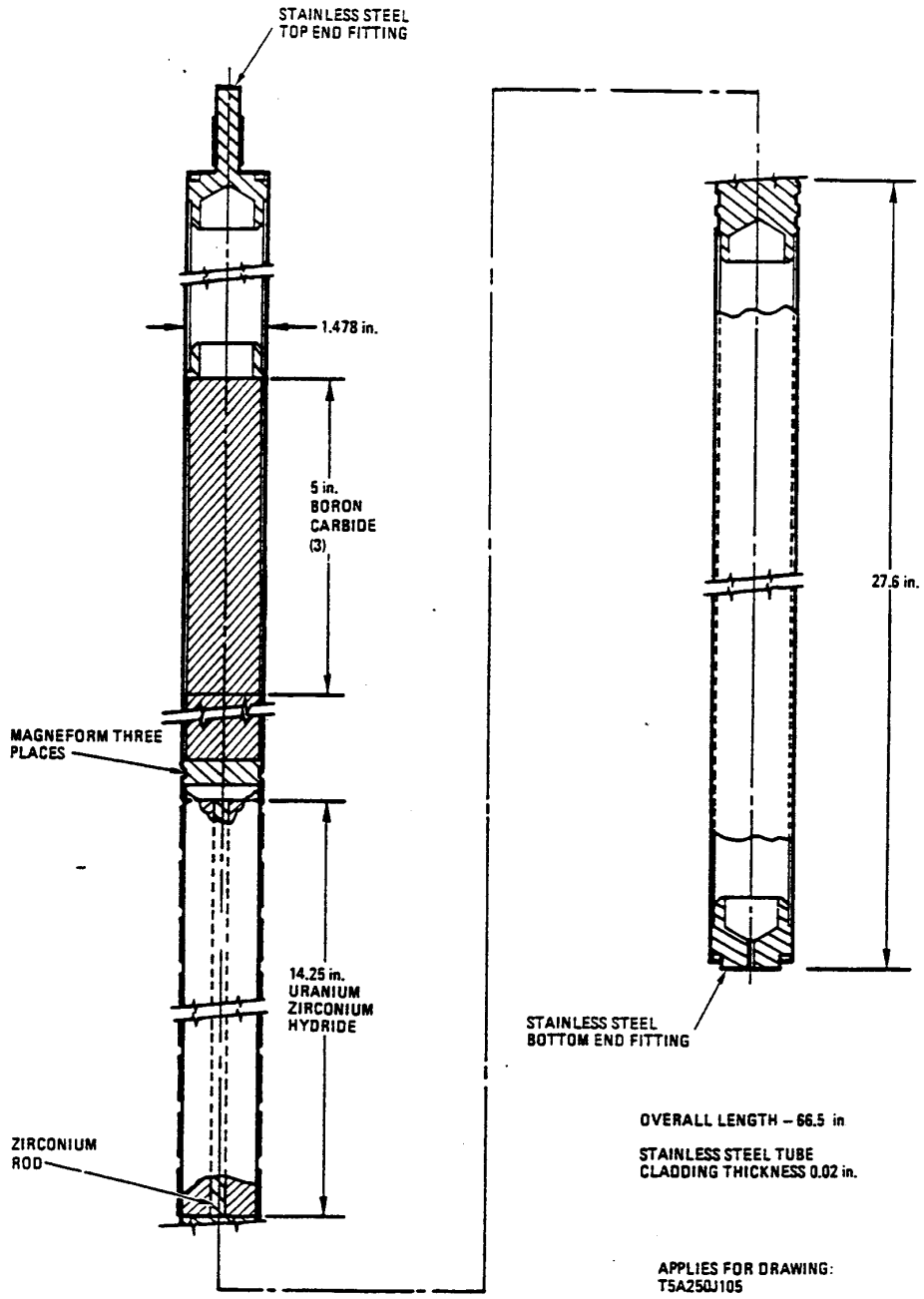

Fig. 3-10. ACPR fuel follower control rod element

The uppermost 6.0-in. section is an air void and the next 15.0 in. is the neutron absorber (boron carbide in solid form). Immediately below the neutron absorber is a fuel follower section consisting of 14.25 in. of U-Zr $H_{1.6}$ fuel. The bottom section of the rod has a 25.0-in. air void.

Each element is clad with a 0.02-in.-thick stainless steel can. Stainless steel fixtures are attached to both ends of the can.

3.3. MATERIALS

3.3.1. Aluminum Clad Elements

The components of the spent fuel elements were shown in Figs. 3-1 and 3-2 and are listed below with their associated materials:

Component	Material
Fuel	Uranium Zirconium Hydride
Center Rod*	Zirconium
Burnable Poison Discs**	Samarium Trioxide
Reflectors	Graphite
Cladding	Aluminum
Fittings	Aluminum
Spacer	Aluminum
Thermocouples†	Chromel-Alumel
Tubing†	Aluminum

*Same length as the fuel but 0.225 in. in diameter which is inserted through the center of the fuel. Not included in the 14-in. fuel elements.

**Only for 14-in. fuel elements prior to November 6, 1964.

†For instrumented fuel elements.

3.3.2. Stainless Steel Clad Elements

The components of the spent fuel elements were shown in Figs. 3-3 and 3-5 and are listed below with their associated materials:

Component	Material
Fuel	Uranium Zirconium Hydride
Center Rod*	Zirconium
Burnable Poison Discs**	Samarium Trioxide
Reflectors	Graphite
Cladding	Stainless Steel
Fittings	Stainless Steel
Thermocouples†	Chromel-Alumel
Tubing†	Stainless Steel
Disc††	Molybdenum

3.3.3. Incoloy 800 Clad Elements

The components of the spent fuel elements were shown in Figs. 3-7 and 3-8 and are listed below with their associated materials:

Component	Material
Fuel	Uranium Zirconium Hydride
Spring	Incoloy 800
Cladding	Incoloy 800
Fittings	Stainless Steel or Inconel
Thermocouples†	Chromel-Alumel
Tubing†	Stainless Steel

*Same length as the fuel but 0.225 in. in diameter which is inserted through the center of the fuel. Not included in the 14-in. fuel element.

**Only for 14-in. fuel elements prior to November 6, 1964.

†For instrumented fuel elements.

††For fuel elements after April 15, 1971.
AND NOT FOR ALPIL elements

3.3.4. Fuel Follower Control Rod Elements

The components of the spent fuel elements were shown in Figs. 3-9 and 3-10 and are listed below with their associated materials:

Component	Material
Fuel	Uranium Zirconium Hydride
Center Rod*	Zirconium
Poison	Boron Carbide
Plugs	Stainless Steel
Cladding	Stainless Steel
Fittings	Stainless Steel

3.4. WEIGHTS

3.4.1. Assembly Weights

The weights of the different styles of fuel elements are listed below:

	Approximately
Aluminum Clad	2.9 kg
Stainless Steel Clad	3.4 kg
Incoloy 800 Clad**	
Fuel Follower Control Rod**	
ACPR Fuel Follower Control Rod**	

*Same length as the fuel but 0.225 in. in diameter and inserted through the center of the fuel.

**Not readily available.

3.4.2. Component Weights

3.4.2.1. Aluminum or Stainless Steel Clad Element.

	Approximately
Fuel Section	2100 grams
Two Reflectors	450 grams
Aluminum Cladding	140 grams
Stainless Steel Cladding	270 grams
Two Aluminum Fittings	140 grams
Two Stainless Steel Fittings	530 grams

3.4.2.2. Incoloy 800 Clad Element.

	Approximately
Fuel Section	600 grams
Cladding*	
Two Fittings*	

3.4.2.3. Fuel Follower Control Rod Element.

	Approximately
Fuel Section	2000 grams
Poison*	
Cladding*	
Two Fittings*	

*Not readily available.

3.4.3. Material Weights

3.4.3.1. Aluminum Clad Elements. Each fuel section contains the following quantities of material:

Material	Approximately
U-238	144 g
U-235	36 g
Zirconium	2070 g

3.4.3.2. Stainless Steel Clad Elements. See Table 3-5 for the quantities of materials contained for each different type of fuel section.

3.4.3.3. Incoloy 800 Clad Elements. Each fuel section contains the following quantities of materials:

Material	Approximately
U-238	219 g
U-235	55 g
Zirconium	327 g
Erbium	5 g

3.4.3.4. Fuel Follower Control Rod Elements. See Table 3-6 for the quantities of materials contained for each different type of fuel section.

3.5. POSTIRRADIATION CONDITION OF SPENT FUEL

There are five conditions when fuel is considered spent fuel. These are:

1. Irradiated (burnup).
2. Growth (AL clad $\geq$ 0.5 in., SST clad $\geq$ 0.1 in.).
3. Bowed (bow greater than 0.063 in.).

TABLE 3-5
STAINLESS STEEL CLAD FUEL ELEMENTS FUEL SECTION COMPOSITIONS

Designation	Material Weight (grams)			
	U-238	U-235	Zirconium	Erbium
Standard	156	39	2088	0
FLIP[a]	59	137	2060	20-36
FLIP-LEU[b]-I	403	101	1988	9-20
FLIP-LEU-II	659	165	1886	9-20
ACPR[c]	215	54	1962	0

[a]Fuel Life Improvement Program.

[b]Low Enriched Uranium.

[c]Annular Core Pulsed Reactor. Composition applies only for TRIGA ACPR fuel type elements.

TABLE 3-6
FUEL FOLLOWER CONTROL ROD ELEMENTS FUEL SECTION COMPOSITIONS

Designation	Material Weight (grams)			
	U-238	U-235	Zirconium	Erbium
Standard	150	38	2004	0
FLIP-LEU-I[a]	387	97	1908	9-20
ACPR[b]	215	54	1962	0

[a]Fuel Life Improvement Program - Low Enriched Uranium - I.

[b]Annular Core Pulsed Reactor. Composition applies only for TRIGA ACPR fuel type elements.

4. Ruptured.
5. Handling damage and rejects.

The current spent fuel inventory indicates that growth and rupture has occurred primarily with the aluminum clad elements.

Spent fuel stored at TRIGA reactor facilities consists mainly of irradiated intact aluminum clad fuel elements that will no longer be used. A few of the elements in the storage pools are ruptured, damaged, or spent fuel elements.

Spent fuel stored at INEL storage facility is again mainly irradiated intact aluminum clad fuel elements that will no longer be used. A small percentage of the fuel shipped consisted of growth, bowed, ruptured, and damaged fuel.

Two TRIGA reactor facilities that have shipped a quantity of damaged elements to INEL are the Neutron Radiography Facility at Westinghouse Hanford Company and the Mark I reactor at GA Technologies Inc. The Neutron Radiography Facility received highly corroded aluminum clad elements (32) from a decommissioned reactor in Vietnam. They, in turn, shipped the fuel to INEL in sealed containers. These elements were damaged by contaminated water used in the Vietnamese reactor.

GA Technologies Inc. has shipped damaged disassembled aluminum clad elements (53) sealed in individual canisters to INEL. These damaged elements were the outcome of experimental operations of the Mark I reactor during fuel development testing. A good portion of the elements experienced bowing and rupturing. Some of the ruptures were: bubbles along the surface, burst bubbles along the surface, vertical gaps along the length of element up to 6 in. long and up to 0.25 in. wide, and radial gaps where sections of the cladding tube actually separated. Some of the elements had a 30 deg bow.

In addition to the elements in the sealed canisters, a few intact damaged elements were shipped by GA Technologies Inc. to INEL. These intact damaged elements were aluminum clad elements with blemished surfaces. Some of the blemishes are black markings, scratches, rust spots, and scuff marks.

3.6. PACKAGING

3.6.1. Fuel Shipped by GA Technologies Inc.

The damaged disassembled aluminum clad elements (53) were shipped in sealed individual canisters as shown in Fig. 3-11. Elements inserted in these canisters were: (1) bowed so that they could not be placed into a 2-in. hole and/or, (2) ruptured and showed indications of decladding along the surface or, (3) broken in pieces.

The elements that were greatly bowed were disassembled and the element components were placed inside a 1.875 in.-o.d./1.777 in.-i.d. by 26.5-in.-long stainless steel canister. The fuel section, reflectors, and fittings were inserted in the canister.

The ruptured elements were disassembled. The fuel section was placed in a 1.47-in.-o.d. by 14- or 15-in.-long stainless steel sleeve* crimped at one end. If the fuel section could not be inserted into the sleeve, then it was left sleeveless. The fuel section, reflectors, and fittings were then inserted in the same size canister as was used for the bowed fuel.

Some elements had been previously stored in sealed containers of various sizes. They were extracted from these storage containers and reinserted in the uniform sized canister described above. These old

*The 14-in.-long sleeve reflects the 14-in. fuel section. The 15-in.-long sleeve reflects the 15-in. fuel section.

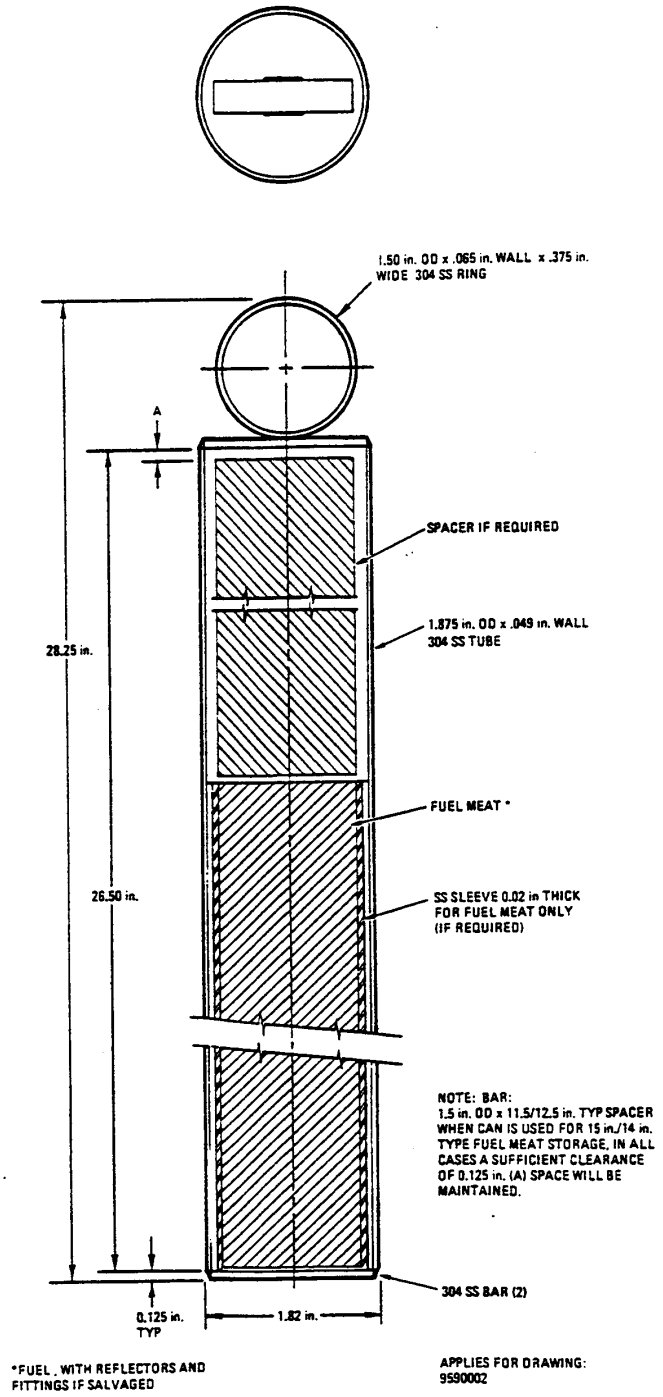

Fig. 3-11. Fuel canister for damaged TRIGA elements

storage containers contained either just the fuel section or the fuel section with a combination of reflectors and fittings (if salvaged). Elements that did not have the complete assembly of components were placed in the canister with a spacer. This spacer is a stainless steel bar 1.5-in. o.d. with a maximum length of 12.5 in. The length of the bar varies depending upon how many components of the element were salvaged. If the fuel section was decladded or ruptured, a stainless steel sleeve, as described above, was used.

The fuel canister has a 1.5-in. o.d. stainless steel ring welded on the top of the canister. This ring is used for handling purposes. Each fuel canister has the fuel element serial number embossed on the outer top-side-surface of the canister.

3.6.2. Fuel Shipped by Westinghouse Hanford Company

The damaged aluminum clad elements (32) along with a few elements (8) from storage were shipped in eight sealed containers. These sealed containers are made of stainless steel in which each container holds five fuel elements. A full description and drawing of this sealed container can be obtained from INEL.

4. CURRENT SPENT FUEL INVENTORY

Although GA has manufactured over 10,000 TRIGA fuel elements, much of this inventory is still in the different reactors world-wide. Approximately half of the fuel is in foreign reactor facilities and generally this fuel will not be? returned to the U.S. for treatment and/or disposal. Of the fuel in the U.S., approximately 900 fuel elements have been classified as spent fuel and approximately 3000 fuel elements are still in the various U.S. reactors or as spare elements at these reactors.

The information on TRIGA spent fuel inventory was obtained from the various TRIGA owners and INEL. There are approximately 240 spent fuel elements stored at the individual reactors and 665 spent fuel elements stored in the Wet Storage Facility at The Idaho Chemical Processing Plant (ICPP) at INEL. Table 4-1 provides the at-reactor and ICPP spent fuel inventory for each U.S. reactor. The table is based on input from the reactor operators. Discrepancies from the ICPP data are noted.

It should also be noted that some TRIGA fuel will be stored in the Rockwell Hanford retrieval storage facility.

Table 4-2 provides a detailed listing of the TRIGA spent fuel currently stored at various TRIGA facilities. Serial numbers and assembly drawing numbers are provided as available.

Table 4-3 provides a detailed listing of the TRIGA spent fuel currently stored at INEL. The data received from the reactor operators differs slightly from the data received from ICPP. The data received from ICPP also includes a number of BER-II fuel elements listed as TRIGA fuel. This fuel comes from a German reactor which is not a TRIGA reactor.

TABLE 4-1
INVENTORY OF TRIGA SPENT FUEL

Reactor Owner	Spent Fuel	
	AR[a]	ICPP
University of Arizona	1	0
GA Technologies Inc.	22	360
Norair[b]	0	0
UC-Berkeley	0	0
UC-Irvine	0	0
Aerotest	2	0[c]
US Geological Survey	1	0
Argonne-West	4	3
University of Illinois	0	0
Harry Diamond Lab[b]	0	0
AFRRI	0	0
University of Maryland	0	0
Dow Chemical	0	0
Michigan State	12	53[d]
VA Hospital, Omaha	0	0
Sandia	0	0[e]
Columbia University	0	0
Cornell University	7	64
Oregon State	0	0
Reed College	1	0
Penn State	8	0
Puerto Rico Nuclear Center[b]	0	0
Texas A&M	0	0
University of Texas	0	62
University of Utah	4	0
Washington State	86	0
Kansas State	1	62[f]
Westinghouse Hanford	90[g]	40[h]
University of Wisconsin	0	8[i]
	239	652[j]

[a]At reactor.

[b]Reactor decommissioned and fuel sent to other reactors.

[c]One element disposed at Nevada Waste Disposal.

[d]ICPP reports 54 elements.

[e]ICPP reports 2 elements.

[f]ICPP reports 61 elements.

[g]To be shipped to Rockwell Hanford, originally from Oregon State.

[h]ICPP reports 59 elements, originally from Vietnam.

[i]ICPP does not list these in their report.

[j]ICPP reports 665 elements.

TABLE 4-2
AT-REACTOR TRIGA SPENT FUEL INVENTORY

Reactor Owner	No. of Spent Fuel Elements	Element Serial No.	Element Type (Drawing No.)	Location
University of Arizona	1	4058	(a)	Tucson, AZ
GA Technologies Inc.	22	(a)	(a)	San Diego, CA
Aerotest	2	1780E	(a)	San Ramon, CA
		1248E	(a)	
U.S. Geological Survey	1	5766	TOS250D205A	Denver, CO
Michigan State University	12	2041	(b)	East Lansing, MI
		2037	(b)	
		2089	(b)	
		2044	(b)	
		2052	(b)	
		2042	(b)	
		2099	(b)	
		2068	(b)	
		2119	(c)	
		2143	(c)	
		2148	(c)	
		2462	(c)	
Cornell University	7	(a)	(a)	Ithaca, NY
Reed College	1	5529	TOS210D160	Portland, OR
Penn State University	8	3709	TOS210D210	University Park, PA
		3737	TOS210D210	
		3775	TOS210D210	
		3807	TOS210D210	
		3811	TOS210D210	
		6572	TOS210D210M	
		7875	TOS210D210R	
		6749	(a)	
University of Utah	4	193	(a)	Salt Lake City, UT
		252	(a)	
		295	(a)	
		361	(a)	
Washington State University	86	(a)	(d)	
Kansas State University	1	2749E	(b)	Manhattan, KS
Westinghouse Hanford	90	See Appendix F	(a)	Hanford, WA[e]
Argonne West	4	7450	(a)	INEL, ID[f]
		7453	(a)	
		7463	(a)	
		7486	(a)	

[a]Data not readily available.

[b]Standard aluminum fuel elements as described in Section 3, specific drawing number unknown.

[c]Instrumented aluminum fuel elements as described in Section 3, specific drawing number unknown.

[d]Standard and instrumented stainless steel fuel elements (non-FLIP) as described in Section 3, specific drawing number unknown.

[e]Being shipped to Rockwell Hanford Retrievable Storage Facility.

[f]To be shipped to ICPP.

TABLE 4-3
ICPP TRIGA SPENT FUEL INVENTORY

Reactor	Number of Spent Fuel Elements	Element Serial No.	Element Type (Drawing No.)
GA Technologies Inc.	360	Appendix A	(a)
Argonne-West	3	6452	(b)
		6489	(b)
		6494	(b)
Michigan State	53[e]	Appendix B	(a)
Sandia	2	4778	(a)
		4957	(a)
Cornell University	64	Appendix C	(c)
University of Texas	62	Appendix D	(c)
Kansas State	62[f]	Appendix E	(a)
Westinghouse Hanford	40[g]	Appendix F	(a)
University of Wisconsin	8[h]	8880	(d)
		8881	(d)
		8882	(d)
		8883	(d)
		8891	(d)
		8892	(d)
		8893	(d)
		8888	(d)

[a]Data not available.

[b]TRIGA FLIP fuel as described in section 3, drawing numbers not available.

[c]Aluminum clad, drawing numbers not available.

[d]Either drawing number T4S210D110 or T4S210D105.

[e]ICPP reported 54 elements.

[f]ICPP reported 61 elements.

[g]ICPP reported 59 elements.

[h]ICPP does not list these in their report.

5. BURNUP ANALYSIS AND ISOTOPIC COMPOSITION

5.1. INITIAL HEAVY METAL LOADINGS

Initial heavy metal loadings per element were provided in Section 3.4.3.

5.2. FUEL BURNUP

Spent fuel burnup on both aluminum or standard stainless steel clad elements range typically from 10% to 20%. But the FLIP stainless steel clad elements (70% uranium enriched) have burnups from 30% up to 50%.

No burnup analysis has been performed on individual fuel elements by the various reactor operators. Typical burnup analysis was performed as part of fuel design and the results are not available but can be generated.

5.3. FUEL ACCOUNTABILITY

Postirradiation fuel loadings on specific elements were provided to INEL by each of the TRIGA reactor facilities that has shipped spent fuel. This data from the facilities was sent to INEL as part of the shipping records. Samples of postirradiation fuel loadings from various TRIGA reactor facilities are listed in Appendices A through F.

5.4. FISSION PRODUCT INVENTORY (REFS. 2 AND 3)

The fission product inventory at several time periods for an average power element operated at 10 kW for two years are shown in Fig. 5-1. The activity in curies is for an element operating in an average power density region of a 100 element core having operated two

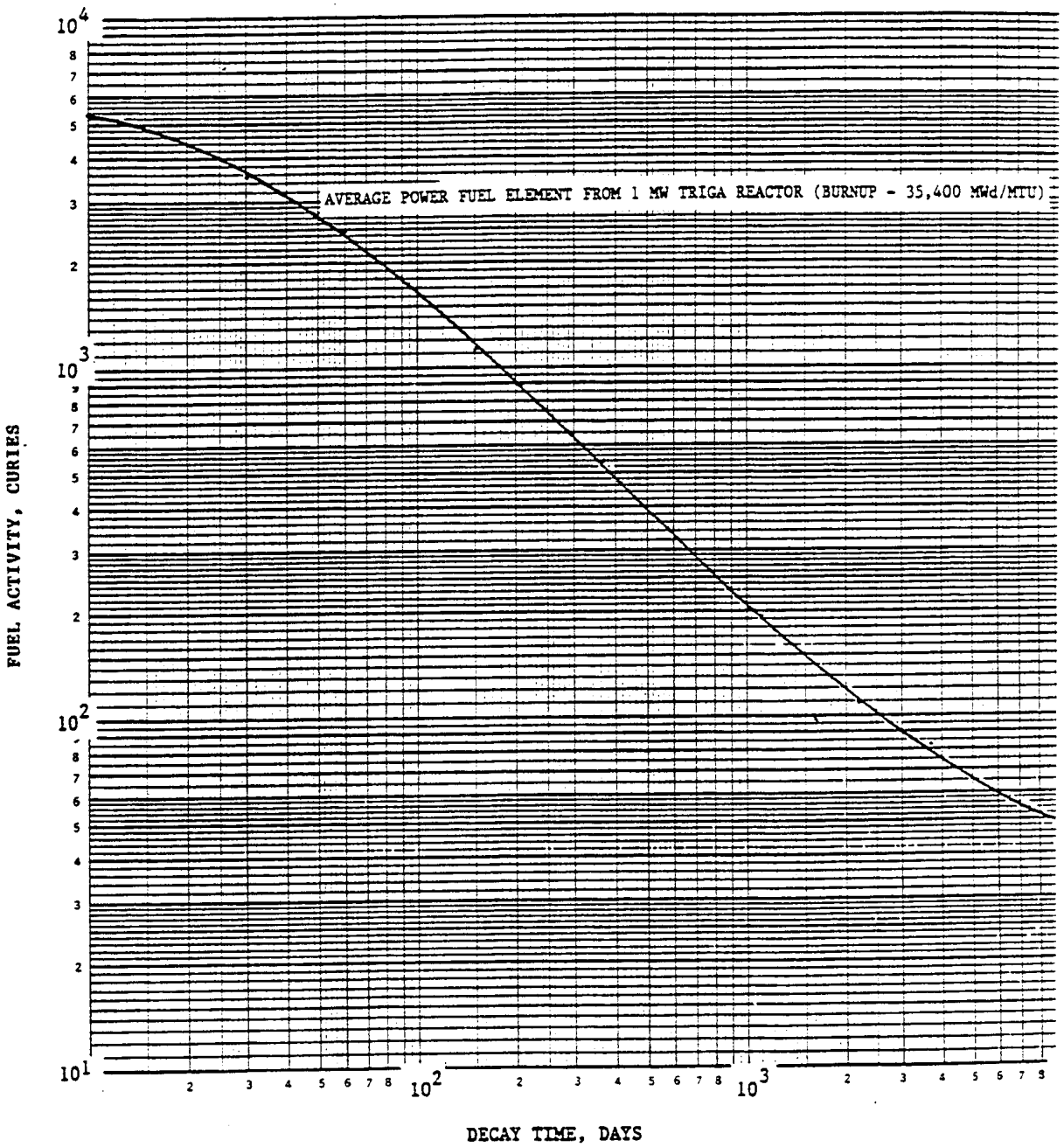

Fig. 5-1. Irradiated fuel element (Al or SST clad) average activity

years in a reactor producing 1000 kW. The data was generated from a computer program called "RADC" and only reflects fission products. Detailed output tables by nuclide are included in Appendix G.

5.5. RADIOACTIVITY (REF. 2)

The gamma dose rate for a standard element (aluminum or stainless steel clad) is plotted as a function of decay time from one day up to 1000 days (see Fig. 5-2). Actual measured dose rates from TRIGA fuel elements, shipped to INEL by GA Technologies Inc., prior to shipment are shown in Appendix A.

The gamma dose rate for a FLIP element (stainless steel clad) is plotted as a function of decay time from one day to 1000 days (see Fig. 5-3).

The gamma dose rate for a FLIP-LEU-I element (stainless steel clad) is plotted as a function of decay time from one day up to 1000 days (see Fig. 5-4).

Figures 5-1, 5-2, and 5-3 have shown two curves; one for a 250 kW reactor and the other for a 1 MW reactor. Each curve represents the radioactivity for an element that has operated at one watt.

5.6. THERMAL POWER (REFS. 2, 3, and 4)

The decay heat generation for an average power element operated at 3.6 kW for five years is shown in Fig. 5-5. The decay heat in watt is for a standard SST fuel element operating in an average power density region of a 70 element core having operated five years in a reactor producing 250 kW.

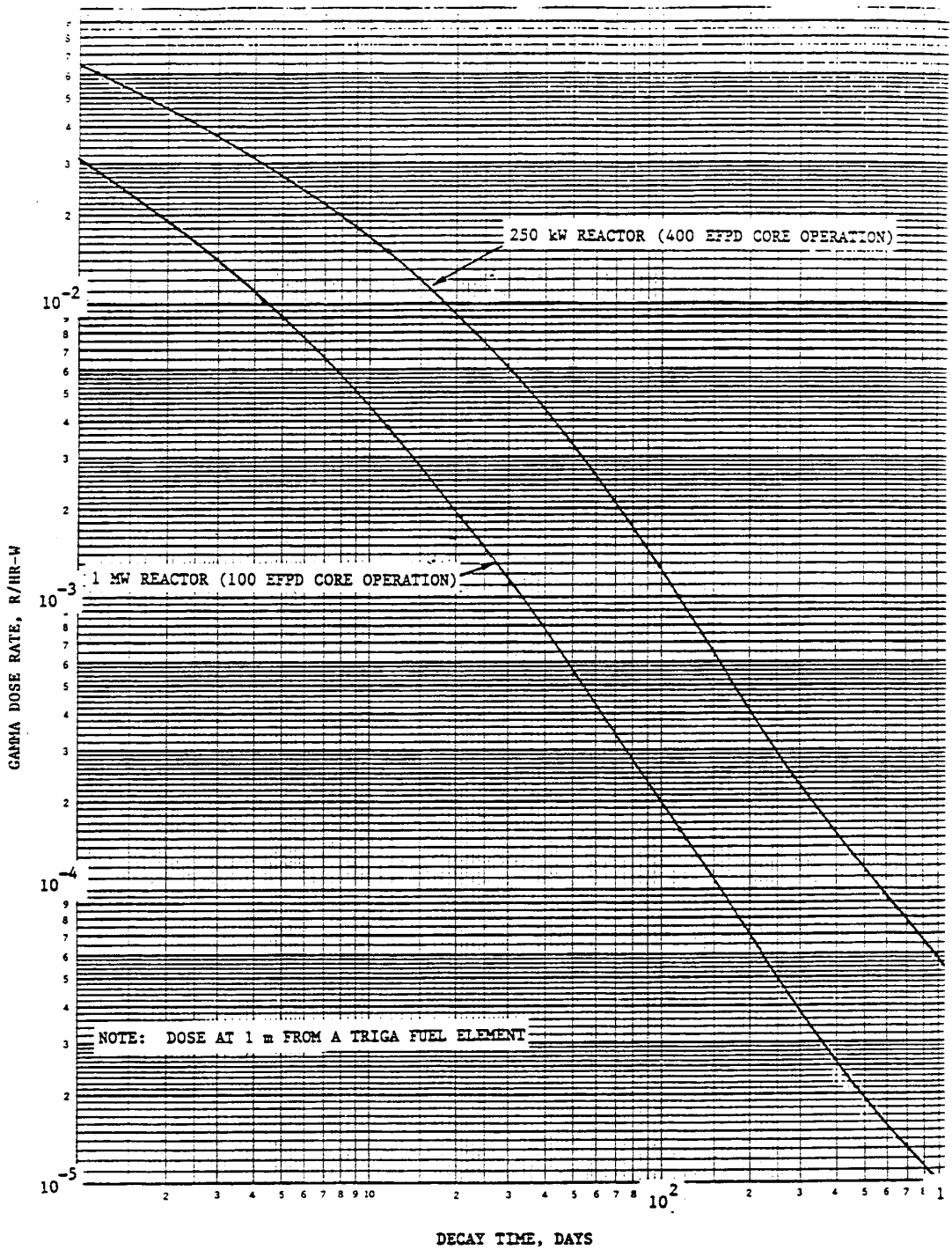

Fig. 5-2. Gamma dose rate for a standard element (Al or SST clad) operated at 1 watt

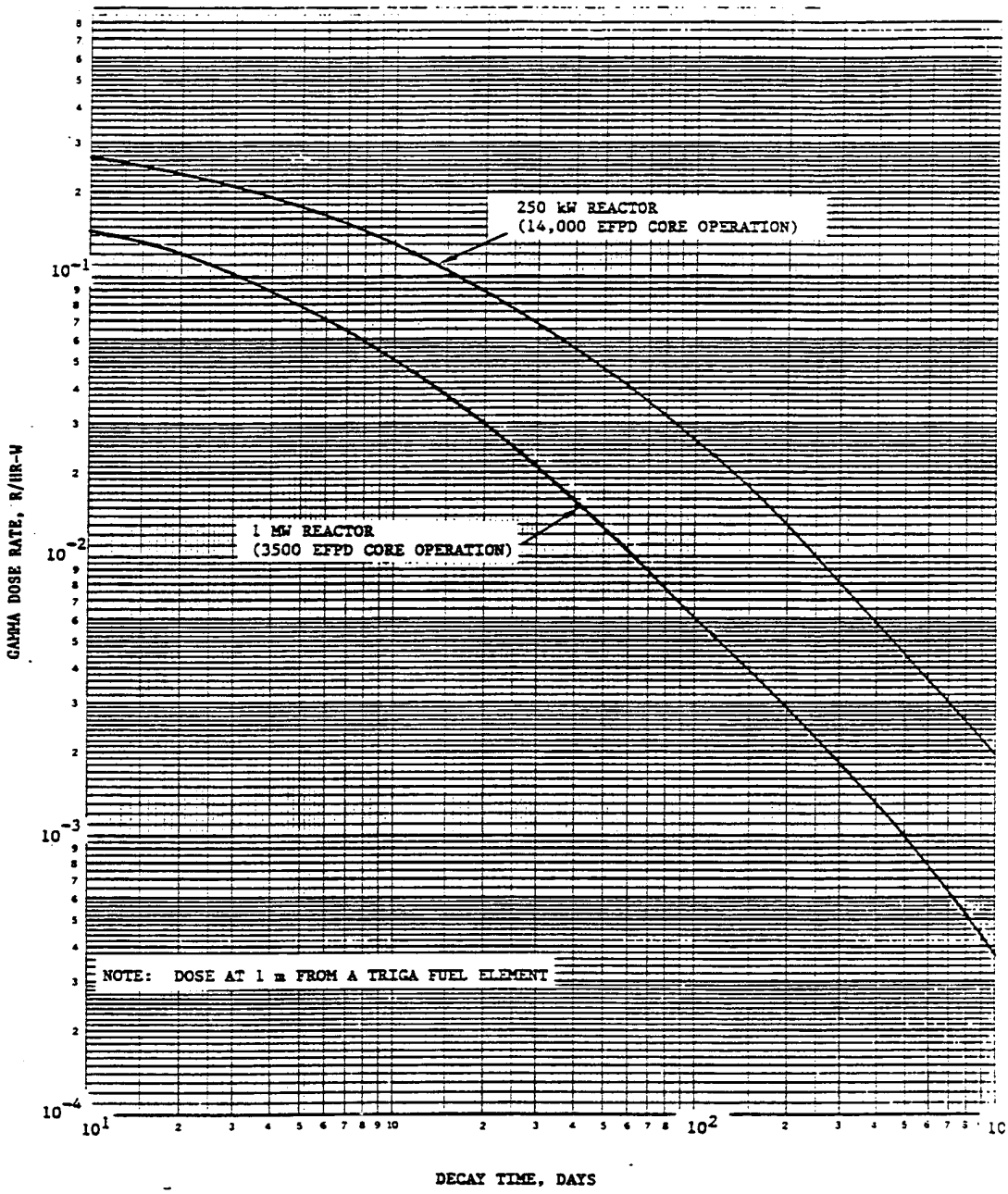

Fig. 5-3. Gamma dose rate for a FLIP element (SST clad) operated at 1 watt

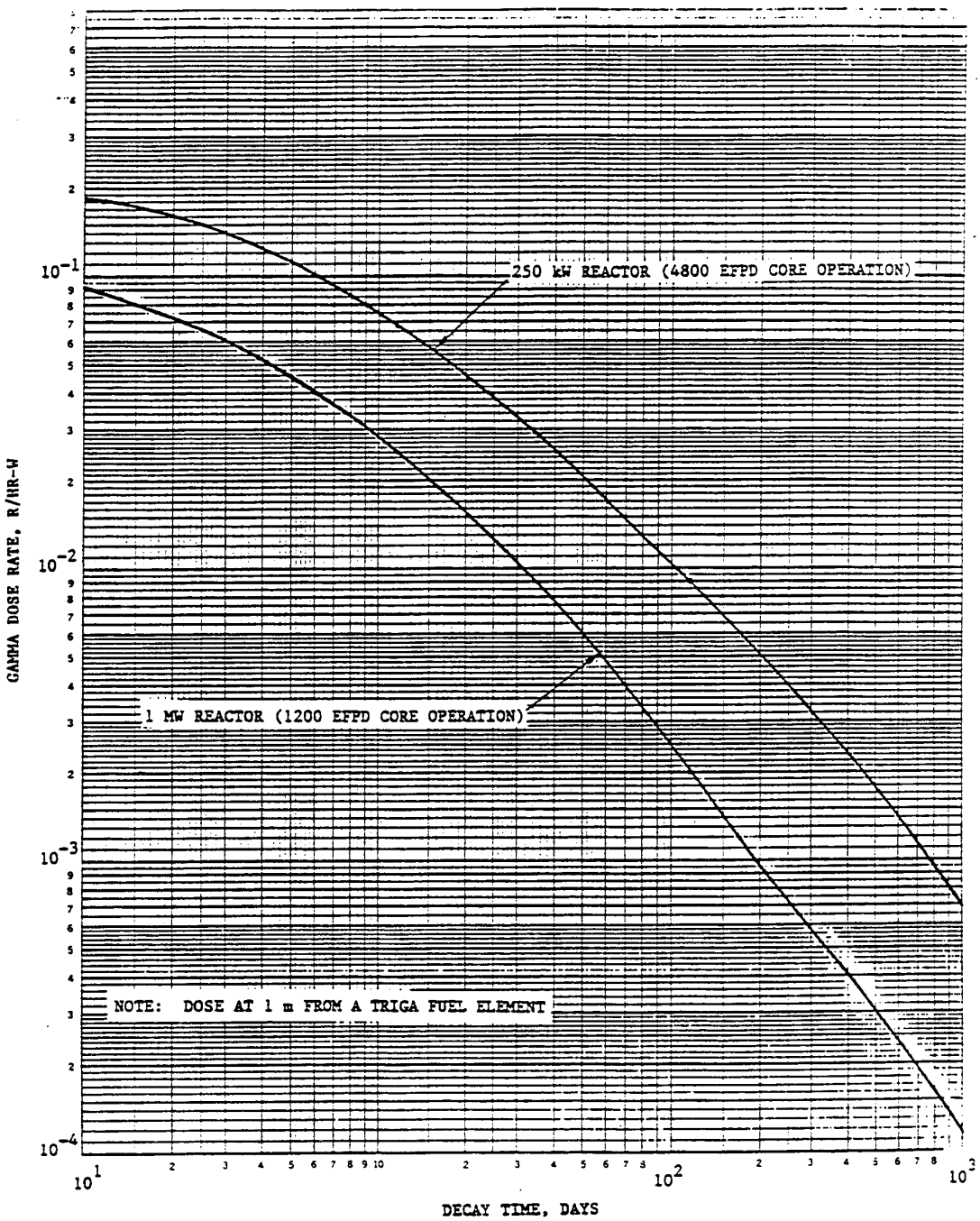

Fig. 5-4. Gamma dose rate for a FLIP-LEU-I element (SST clad) operated at 1 watt

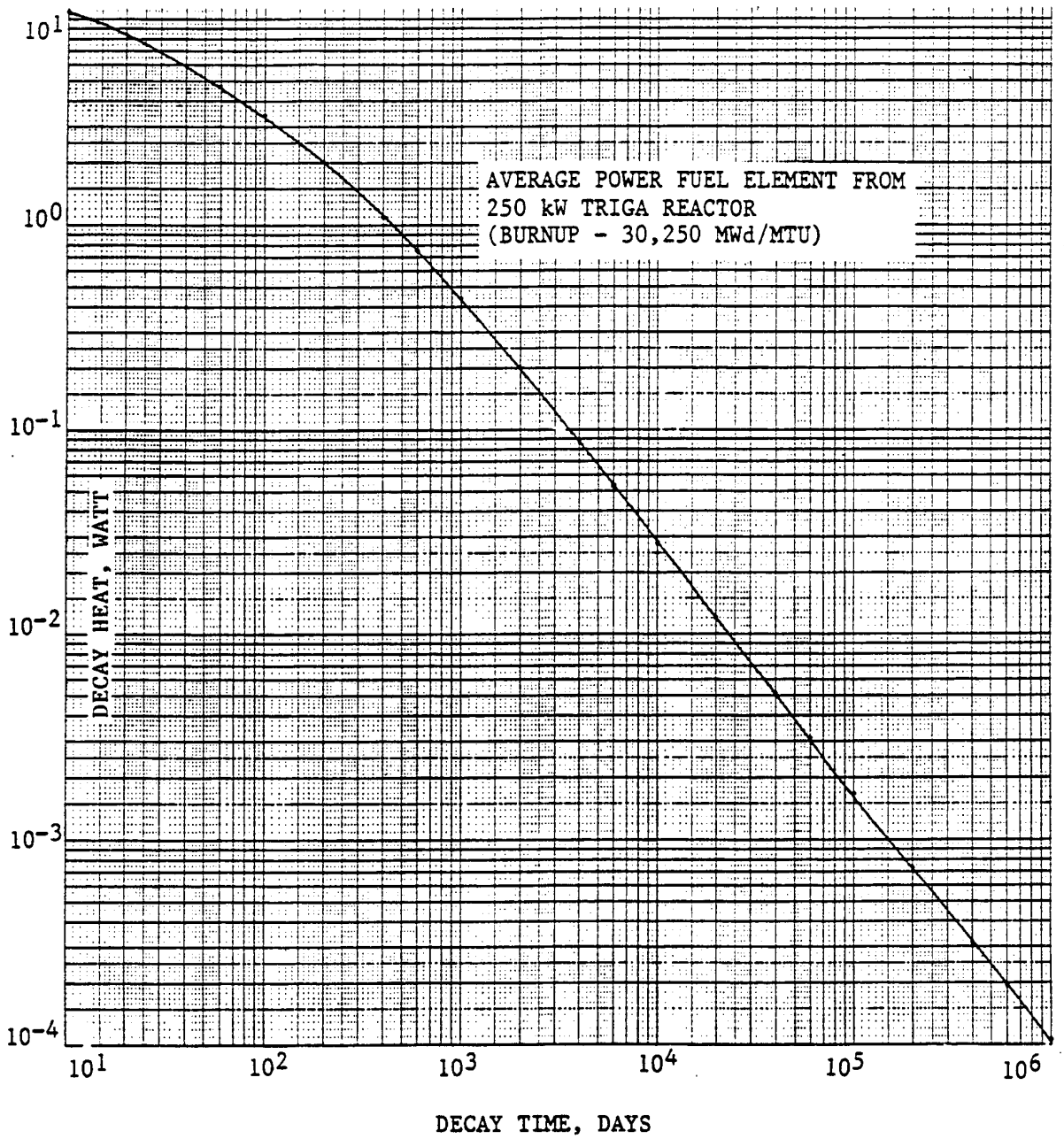

Fig. 5-5. Decay heat for a standard SST fuel element

6. DOE OBLIGATIONS

DOE obligations concerning TRIGA spent fuel are stated in the Federal Register notice entitled "Receipt and Financial Settlement Provisions for Nuclear Research Reactor Fuels" Volume 51, No. 32, p. 5754, published February 18, 1986. This current policy provides the receipt and financial settlement of U.S.-origin spent research reactor fuels.

To summarize, DOE takes ownership of the fuel upon receipt at INEL and will provide for the receipt and storage of the spent fuel. DOE will either permanently dispose of, or chemically reprocess this spent fuel.

7. REFERENCES

1. 1 MW(e) TRIGA Mark II Pulsing Reactor and Support Facilities, GA Technologies, Inc., TYP-21, January 1983.
2. Foushee, F. C., "Dose Rates and Heat Generation in Stored TRIGA Fuel," Internal Memo, June 5, 1986.
3. Foushee, F. C., "Power Density and Burnup in TRIGA Fuel," Internal Memo, September 3, 1986.
4. Glasstone, S., and A. Sesonske, "Nuclear Reactor Engineering," D. Van Nostrand Company, Inc., New Jersey, 1963.

APPENDIX A

PACKING LISTS FOR 13 SHIPMENTS OF TRIGA SPENT FUEL FROM GA TECHNOLOGIES INC. TO THE IDAHO NATIONAL ENGINEERING LABORATORY

GENERAL ATOMIC COMPANY

TRANSFER SERIES: ZGO - JXI - 1

PACKING LIST

REACTOR NAME: TRIGA

6/30/82

Page 1 of 2

Line No.	Serial No.	Cladding Material	Cask Loc.	Kgs Net	Grams Uranium	Grams U-235	Dose Rate Mr/Hr 3 ft	Dose Rate Mr/Hr 6 ft	Remarks
1	552	Aluminum	A1	2	181	36	30	8	
2	135		A2	2	179	35	36	8	
3	164		A3	2	184	37	33	8	
4	559		A4	2	178	35	23	5	
5	342		A5	2	184	36	37	10	
6	1093		A6	2	188	37	8	2	
7	197		A7	2	187	37	35	9	
8	187		A8	2	184	37	36	8	
9	373		A9	2	183	36	40	8	
10	535		A10	2	178	35	46	10	
11	157		A11	2	178	35	47	11	
12	813		A12	2	181	36	11	5	
13	194		A13	2	179	36	38	8	
14	1217		A14	2	185	37	100	14	
15	1193		A15	2	184	37	100	14	
16	1727		A16	2	180	36	200	4	
17	1826		A17	2	181	36	150	15	
18	1261		A18	2	190	38	100	14	
19	1273		A19	2	187	37	100	14	
20	1265		B1	2	179	35	16	4	
21	2229		B2	2	173	34	6	2	
22	1238		B3	2	186	37	18	4	
23	2328		B4	2	173	34	8	2	
24	1258		B5	2	184	37	18	4	
25	1805		B6	2	191	38	42	8	
26	1051		B7	2	192	38	27	5	
27	1790		B8	2	181	36	75	15	
28	1813		B9	2	194	38	50	10	
29	1809		B10	2	189	38	45	9	
30	1734		B11	2	189	38	50	10	
		Page Total		60	5502	1092			
		TOTAL							

GENERAL ATOMIC COMPANY

TRANSFER SERIES: 260-JXI-1

PACKING LIST

REACTOR NAME: TRIGA

Line No.	Serial No.	Cladding Material	Cask Loc.	Kgs Net	Grams Uranium	Grams U-235	Dose Rate Mr/Hr 3 ft	Dose Rate Mr/Hr 6 ft	Remarks
1	1803	Aluminum	B12	2	182	36	40	9	
2	1635		B13	2	186	37	40	9	
3	1613		B14	2	188	37	99	17	
4	1807		B15	2	175	35	34	8	
5	1825		B16	2	181	36	90	15	
6	1798		B17	2	180	36	38	8	
7	1824		B18	2	191	36	40	8	
8	1605		B19	2	185	37	75	14	
9									
10									
11									
12									
13									
14									
15									
16									
17									
18									
19									
20									
21									
22									
23									
24									
25									
26									
27									
28									
29									
30									
		Page Total		16	1458	290			
		TOTAL		76	6960	1382			

GENERAL ATOMIC COMPANY

TRANSFER SERIES: ZGQ-JXI

PACKING LIST

REACTOR NAME: TRIGA

7/7/82

Page 1 of 2

Line No.	Serial No.	Cladding Material	Cask Loc.	Kgs Net	Grams Uranium	Grams U-235	Dose Rate Mr/Hr 3 ft	Dose Rate Mr/Hr 6 ft	Remarks
1	1817	Aluminum	A1	2	195	.39	38	8	
2	1573		2	2	192	.38	90	18	
3	1513		3	2	191	.38	290	60	
4	1754		4	2	178	.35	260	55	
5	1760		5	2	172	.34	320	70	
6	2411	SS	6	2	183	.36	330	75	
7	2383	SS	7	2	183	.36	210	50	
8	1668	Aluminum	8	2	176	.35	80	20	
9	3186		9	2	179	.36	170	30	
10	1742		10	2	180	.36	350	75	
11	2450	SS	11	2	181	.36	100	25	
12	2368	SS	12	2	181	.36	200	50	
13	3175	Aluminum	13	2	183	.37	480	100	
14	3178		14	2	180	.36	440	90	
15	3012	SS	15	2	186	.37	1800	430	
16	1761	Aluminum	16	2	181	.36	700	140	
17	1834		17	2	183	.36	6	2	
18	1829		18	2	185	.37	37	8	
19	1656		19	2	183	.36	49	10	
20	1708		B1	2	189	.37	39	9	
21	1664		2	2	179	.36	60	15	
22	1650		3	2	187	.37	2	0	
23	1657		4	2	184	.36	23	10	
24	1792		5	2	190	.38	39	9	
25	1791		6	2	184	.36	43	10	
26	1812		7	2	180	.36	31	7	
27	1612		8	2	186	.37	35	8	
28	1640		9	2	199	.39	37	8	
29	1264		10	2	191	.38	23	5	
30	864		11	2	183	.36	13	3	
		Page Total		60	5,524	1096	6254	1400	
		TOTAL							

GENERAL ATOMIC COMPANY

TRANSFER SERIES: ZGO-TXT-

PACKING LIST

REACTOR NAME: TRIGA

Line No.	Serial No.	Cladding Material	Cask Loc.	Kgs Net	Grams Uranium	Grams U-235	Dose Rate Mr/Hr 3 ft	Dose Rate Mr/Hr 6 ft	Remarks
1	1678	Aluminum	B12	2	188	37	31	7	
2	1591		13	2	175	35	8	2	
3	1756		14	2	184	36	35	8	
4	1814		15	2	175	35	15	4	
5	1572		16	2	183	36	36	8	
6									
7									
8									
9									
10									
11									
12									
13									
14									
15									
16									
17									
18									
19									
20									
21									
22									
23									
24									
25									
26									
27									
28									
29									
30									
		Page Total		10	909	175	125	29	
		TOTAL		70	6433	1275	6415	1428	

GENERAL ATOMIC COMPANY

TRANSFER SERIES: ZGO-JXM

PACKING LIST

REACTOR NAME: TRIGA

7/12/82

Page 1 of 2

(3)

Line No.	Serial No.	Cladding Material	Cask Loc.	Kgs Net	Grams Uranium	Grams U-235	Dose Rate Mr/Hr 3 ft	Dose Rate Mr/Hr 6 ft	Remarks
1	1831	AL		2	189	37	18	5	
2	3325	SS		2	190	38	1450	380	
3	3309	↓		2	191	38	300	80	
4	1822	AL		2	186	37	30	8	
5	2394	SS		2	185	37	125	32	
6	2443	↓		2	183	36	320	90	
7	2397			2	188	37	195	50	
8	3514			2	192	38	1500	375	
9	3873			2	193	39	1600	380	
10	2382			2	184	37	200	50	
11	2375	↓		2	183	36	250	60	
12	1673	AL		2	186	37	480	120	
13	3016	SS		2	177	35	150	40	
14	3019	↓		2	177	35	85	25	
15	2025	↓		2	172	34	200	50	
16	1836	AL		2	187	37	55	12	
17	1651	↓		2	183	36	34	8	
18	2436	SS		2	185	37	800	150	
19	2373	↓		2	184	36	200	60	
20	1847 -	AL		2	188	37	55	12	
21	3693	SS		2	188	38	1250	310	
22	1797	AL		2	184	36	80	18	
23	3020	SS		2	184	37	80	20	
24	1561	AL		2	171	34	70	16	
25	2413	SS		2	181	36	150	38	
26	2410	↓		2	182	36	132	32	
27	560	AL		2	179	35	45	11	
28	1002	↓		2	188	37	8	2	
29	974	↓		2	188	37	9	2	
30	1240	↓		2	165	36	5	5	
		Page Total		60	5546	1059	9991	2446	
		TOTAL							

GENERAL ATOMIC COMPANY

TRANSFER SERIES: ZGO-JX1

PACKING LIST

REACTOR NAME: TRIGA

Line No.	Serial No.	Cladding Material	Cask Loc.	Kgs Net	Grams Uranium	Grams U-235	Dose Rate Mr/Hr 3 ft	Dose Rate Mr/Hr 6 ft	Remarks
1	3097	SS		2	183	37	1700	400	
2	3146	SS		2	184	37	1600	400	
3									
4									
5									
6									
7									
8									
9									
10									
11									
12									
13									
14									
15									
16									
17									
18									
19									
20									
21									
22									
23									
24									
25									
26									
27									
28									
29									
30									
		Page Total		4	367	74	3300	800	
		TOTAL		64	5913	1173	17181	7246	

GENERAL ATOMIC COMPANY

TRANSFER SERIES: 260-JXI-4cc1 PACKING LIST

(4)

REACTOR NAME: TRIGA

7/19/82

Line No.	Serial No.	Cladding Material	Cask Loc.	Kgs Net	Grams Uranium	Grams U-235	Dose Rate Mr/Hr 3 ft	Dose Rate Mr/Hr 6 ft	Remarks
1	574	AL	A1	2	184	37	25	9	
2	1087		2	2	193	38	25	3	
3	1001		3	2	190	38	23	2	
4	120		4	2	177	35	22	8	
5	113		5	2	180	36	31	11	
6	1017		6	2	189	38	6	3	
7	1121		7	2	187	37	6	3	
8	1158		8	2	193	38	5	2	
9	161		9	2	186	37	30	12	
10	466		10	2	182	36	18	7	
11	1104		11	2	187	37	4	2	
12	179		12	2	179	36	24	8	
13	557		13	2	178	35	21	8	
14	872		14	2	183	36	7	3	
15	1008		15	2	187	37	4	2	
16	452		16	2	184	36	14	6	
17	369		17	2	185	37	25	10	
18	167		18	2	186	37	21	9	
19	1018		19	2	194	38	5	1	
20	1022		B1	2	190	38	5	3	
21	1080		2	2	187	37	5	3	
22	784		3	2	188	37	3	2	
23	1391		4	2	189	37	2	2	
24	1007		5	2	189	37	5	3	
25	1379		6	2	190	38	2	1	
26	1526		7	2	180	36	25	10	
27	1369		8	2	191	38	2	1	
28	1354		9	2	189	37	2	1	
29	1808		10	2	182	36	20	8	
30	1842		11	2	192	38	15	6	
		Page Total		60	5591	1108	402	149	
		TOTAL							

GENERAL ATOMIC COMPANY

TRANSFER SERIES: ZGQ-JXI-1 cel PACKING LIST

(4)

REACTOR NAME: TRIGA

Line No.	Serial No.	Cladding Material	Cask Loc.	Kgs Net	Grams Uranium	Grams U-235	Dose Rate Mr/Hr 3 ft	Dose Rate Mr/Hr 6 ft	Remarks
1	1786	Al	B 12	2	183	36	19	8	
2	1784	(	13	2	183	36	22	8	
3	1801	↓	14	2	182	36	18	7	
4	~~3681~~	SS	15	2	~~187~~ 187	~~37~~ 37	~~4450~~ 1500	~~1300~~ 470	cf
5	2405	(	16	2	181	36	1600	395	
6	3499		17	2	197	39	1550	400	
7	3705	↓	18	2	188	38	1700	450	
8									
9									
10									
11									
12									
13									
14									
15									
16									
17									
18									
19									
20									
21									
22									
23									
24									
25									
26									
27									
28									
29									
30									
		Page Total		14	1201 ~~1268~~	253 ~~257~~	9369 ~~7300~~	2528 ~~1779~~	cf
		TOTAL		74	~~9377~~ 9377	~~1365~~ 1365	~~9761~~ 9761	~~2717~~ 2717	cf 16.3 cu

GENERAL ATOMIC COMPANY

TRANSFER SERIES: ZGA-5X1[illegible]

PACKING LIST

(5)

REACTOR NAME: TRIGA

7/26/82

Line No.	Serial No.	Cladding Material	Cask Loc.	Kgs Net	Grams Uranium	Grams U-235	Dose Rate Mr/Hr 3 ft	Dose Rate Mr/Hr 6 ft	Remarks
1	1198 -	AL	A 1	2	191	38	4	1	
2	1357 -		2	2	190	38	2	1	
3	1305 -		3	2	182	36	4	2	
4	1349 -		4	2	185	37	1	1	
5	1491		5	2	171	34	1	1	
6	146 -		6	2	186	37	37	8	
7	1141 -		7	2	188	37	5	2	
8	1054 -		8	2	188	37	6	2	
9	1024 -		9	2	188	37	6	2	
10	1013 -		10	2	189	37	6	2	
11	1082 -		11	2	188	37	5	2	
12	1378 -		12	2	182	36	4	2	
13	1750		13	2	185	37	25	6	
14	1115 -		14	2	191	38	6	2	
15	1152		15	2	189	37	6	2	
16	1036		16	2	194	38	5	1	
17	1149		17	2	186	37	5	1	
18	198 -		18	2	126	25	26	7	
19	363 -		19	2	167	33	24	6	
20	1133		A 1	2	188	37	7	2	
21	118 -		2	2	184	37	36	8	
22	1118		3	2	192	38	5	1	
23	206		4	2	125	25	25	6	
24	1088		5	2	191	38	6	1	
25	1095		6	2	192	38	8	3	
26	147		7	2	186	37	39	8	
27	1101 -		8	2	189	38	8	2	
28	271 -		9	2	178	35	43	9	
29	450 -		10	2	184	36	26	6	
30	106 -		11	2	175	35	35	8	
		Page Total		60	5,450	1,080	420	105	
		TOTAL							

GENERAL ATOMIC COMPANY

TRANSFER SERIES: 260-JX[illegible]5

PACKING LIST

REACTOR NAME: TRIGA

Page 2 of 2

(5)

Line No.	Serial No.	Cladding Material	Cask Loc.	Kgs Net	Grams Uranium	Grams U-235	Dose Rate Mr/Hr 3 ft	Dose Rate Mr/Hr 6 ft	Remarks
1	1127 -	AL	B 12	2	187	37	8	2	
2	1003 -		13	2	190	38	5	2	
3	253 -		14	2	188	37	48	10	
4	337 -		15	2	186	37	34	8	
5	1492 -		16	2	189	38	1	0	
6	2365	SS	17	2	187	37	2100	600	
7	2371	SS	18	2	184	36	1900	470	
8									
9									
10									
11									
12									
13									
14									
15									
16									
17									
18									
19									
20									
21									
22									
23									
24									
25									
26									
27									
28									
29									
30									
		Page Total		14	1,311	260	4096	1097	
		TOTAL		74	6,761	1,340	4,516	1,197	

GENERAL ATOMIC COMPANY

TRANSFER SERIES: ZGQ-JX[redacted]6

PACKING LIST

(6)

REACTOR NAME: TRIGA

7/30/82

Line No.	Serial No.	Cladding Material	Cask Loc.	Kgs Net	Grams Uranium	Grams U-235	Dose Rate Mr/Hr 3 ft	Dose Rate Mr/Hr 6 ft	Remarks
1	1495	AL	A1	2	188	37	4	1	
2	1489	AL	2	2	183	36	3	1	
3	1493	AL	3	2	185	37	2	1	
4	1363	AL	4	2	193	38	6	2	
5	1365	AL	5	2	191	38	2	0	
6	321	AL	6	2	180	36	12	2	
7	332	AL	7	2	170	34	40	7	
8	3129	SS	8	2	185	37	30	5	
9	3508	SS	9	2	187	37	700	150	
10	2391	SS	10	2	182	36	90	17	
11	3249	SS	11	2	186	37	60	3	
12	2120	AL	12	2	188	37	20	3	
13	1843	AL	13	2	173	34	50	8	
14	3506	SS	14	2	190	38	500	100	
15	3300	SS	15	2	187	37	500	100	
16	1777	AL	16	2	190	38	23	6	
17	1950	AL	17	2	183	36	26	6	
18	2387	SS	18	2	183	36	150	42	
19	3298	SS	19	2	194	39	8	2	
20	2389	SS	A1	2	180	36	210	87	
21	3505	SS	2	2	190	38	6	2	
22	3301	SS	3	2	187	37	700	160	
23	2459	SS	5~~4~~	2	183	36	3	1	Cask loading
24	1490	AL	19~~5~~	2	172	34	5	4	change
25	1948	AL	6	2	150	30	13	3	
26	1951	AL	7	2	135	27	8	2	
27	2121	AL	8	2	183	36	15	4	
28	1852	AL	9	2	185	37	6	0	
29	1778	AL	10	2	185	37	70	12	
30	1779	AL	11	2	185	37	19	5	
		Page Total		60	5453	1083	3321	726	
		TOTAL							

GENERAL ATOMIC COMPANY

TRANSFER SERIES: ZEO-JX-6

PACKING LIST

(6)

REACTOR NAME: TRIGA

Line No.	Serial No.	Cladding Material	Cask Loc.	Kgs Net	Grams Uranium	Grams U-235	Dose Rate Mr/Hr 3 ft	Dose Rate Mr/Hr 6 ft	Remarks
1	1494	AL	B12	2	183	36	7	2	
2	319	AL	13	2	181	36	26	6	
3	329	AL	14	2	172	34	16	5	
4	335	AL	15	2	188	37	17	5	
5	334	AL	16	2	186	37	14	4	
6	330	AL	17	2	170	34	29	8	
7	325	AL	18	2	175	35	29	8	
8									
9									
10									
11									
12									
13									
14									
15									
16									
17									
18									
19									
20									
21									
22									
23									
24									
25									
26									
27									
28									
29									
30									
		Page Total		14	1255	249	138	38	
		TOTAL		24	4,708	1,332	3459	774	

GENERAL ATOMIC COMPANY

TRANSFER SERIES: 260-JXT-7

PACKING LIST

REACTOR NAME: TRIGA

8/6/82

Page 1 of 2

Line No.	Serial No.	Cladding Material	Cask Loc.	Kgs Net	Grams Uranium	Grams U-235	Dose Rate Mr/Hr 3 ft	Dose Rate Mr/Hr 6 ft	Remarks
1	1785	Al	A1	2	181	36	17	5	
2	1346		2	2	184	36	1	1	
3	1568		3	2	189	37	8	4	
4	1589		4	2	187	37	8	1	
5	1518		5	2	190	38	3	1	
6	174		6	2	179	35	26	10	
7	110		7	2	183	36	29	11	
8	169		8	2	185	37	28	12	
9	188		9	2	178	35	26	12	
10	1828		10	2	191	38	16	5	
11	514		11	2	181	36	30	6	
12	1134		12	2	188	37	9	3	
13	1358		13	2	189	37	5	1	
14	1508		14	2	188	37	5	3	
15	1586		15	2	183	36	8	4	
16	1804		16	2	186	37	16	4	
17	1818		17	2	183	36	10	4	
18	128		18	2	190	38	28	8	
19	1732		19	2	183	36	160	30	
20	145		B1	2	176	35	60	12	
21	144		2	2	168	33	47	10	
22	301		3	2	186	37	27	10	
23	141		19	2	177	35	29	11	Note: B4 Empty
24	328		5	2	175	35	22	7	
25	1582		6	2	174	34	315	65+	
26	262		7	2	168	33	38	9	
27	1743		8	2	191	38	100	18	
28	1794		9	2	196	39	38	8	
29	176		10	2	187	37	40	10	
30	290		11	2	180	36	39	9	
		Page Total		60	5,496	1,087	1,188	294	
		TOTAL							

GENERAL ATOMIC COMPANY

(7)

TRANSFER SERIES: ZGO-JSI-7

PACKING LIST

REACTOR NAME: TRIGA

Line No.	Serial No.	Cladding Material	Cask Loc.	Kgs Net	Grams Uranium	Grams U-235	Dose Rate Mr/Hr 3 ft	Dose Rate Mr/Hr 6 ft	Remarks
1	1628	AL	B12	2	188	37	75	12	
2	136		13	2	186	37	38	9	
3	1614		14	2	188	37	440	110	
4	1693		15	2	176	35	240	40	
5	1579		16	2	189	37	39	9	
6	1697		17	2	188	37	28	6	
7	1649		18	2	192	38	6	2	
8									
9									
10									
11									
12									
13									
14									
15									
16									
17									
18									
19									
20									
21									
22									
23									
24									
25									
26									
27									
28									
29									
30									
		Page Total		14	1,307	258	866	188	
		TOTAL		74	6,803	1,345	2,054	482	

GENERAL ATOMIC COMPANY

TRANSFER SERIES: ZGA-TXT-

PACKING LIST

10-21-82 (8)

REACTOR NAME: TRIGA

10/7/82

Page 1 of 1

Line No.	Serial No.	Cladding Material	Cask Loc.	Kgs Net	Grams Uranium	Grams U-235	Dose Rate Mr Hr 1 ft	Dose Rate Mr Hr 3 ft	Remarks
1	5033	SS	1	2	197	32	1000	1300	
2	1766	Al	2	2	197	35	12	4	
3	2273	Al	3	2	197	39	11	2	12" Mod
4	2250		4	2	197	35	16	4	
5	2264		5	2	195	37	10	2	
6	1703		6	2	197	35	38	9	
7	2456	SS	7	2	179	35	100	24	
8	1757	Al	8	2	197	37	210	37	
9	2400	SS	9	2	194	36	155	50	
10	2512		10	2	169	37	1000	210	
11	2005		11	2	197	37	1300	300	
12	2512		12	2	196	37	1300	320	
13	1647	*	1	2	146	36	60	17	Replaced Element in Tank No Spacer
14	307	Al **	2	2	175	35	0	2	Cooled in [illegible]
15	1566	*	3	2	182	36	220	45	Replaced Element in Tank No Spacer
16	1304	*	4	2	162	39	4	2	
17	105	*	5	2	190	36	48	9	
18	1691	*	6	2	190	36	9	2	
19	331	*	7	2	199	37	40	9	Replaced Element in Tank 1½" x 1½" Spacer
20	333	*	8	2	196	37	12	4	1½" x 1½" Spacer
21	1775	*	9	2	162	38	360	70	1½" x 1½" Spacer
22	333	*	10	2	162	37	21	5	No Spacer
23	2123	*	11	2	176	36	330	100	1½" x 1½" Spacer
24	1266		12	2	189	37	10	2	
25									
26	*Natural-Element sealed (welded) in SS tube								
27	**Depleted from natural Al cladding - Tube must								
28	contained in a sealed (welded) SS tube								
29									
30									
	Page Total			29	4424	870	11234	2422	
	TOTAL								

GENERAL ATOMIC COMPANY

TRANSFER SERIES: ZGO - Tx 9

PACKING LIST

(9)

REACTOR NAME: TRIGA

10/20/82

Page 1 of 1

Line No.	Serial No.	Cladding Material	Cask Loc.	Kgs Net	Grams Uranium	Grams U-235	Dose Rate Mr/Hr 3 ft	Dose Rate Mr/Hr 6 ft	Remarks
1	5040	SS	A 1	2	188	33	6000	1300	
2	148	AL	2		179	36	47	10	
3	1029		3		190	38	6	3	
4	882		4		174	34	11	4	
5	983		5		191	38	6	3	
6	150		6		180	36	46	10	
7	1571		7		187	37	220	46	
8	153		8		179	36	48	12	
9	1576		9		188	37	9	2	
10	252		10		185	36	38	9	
11	1669		11		177	35	800	150	
12	1690		12		180	36	34	6	
13	1733	**	A 1		187	37	33	7	
14	2020	*	2		168	33	3	1	
15	1649	*	3		148	29	3	1	
16	1032	*	4		189	37	6	3	
17	1832	*	5		183	36	60	18	
18	173	*	6		173	34	24	10	
19	1700	*	7		188	37	6	2	
20	1595	*	8		176	35	4	1	
21	2311	*	9		168	36	7	3	
22	2997	*	10		163	36	60	17	
23	522		11		179	35	24	5	
24	1788		12		180	36	20	9	
25									
26									
27	* Removed from original AL cladding - fuel meat								
28	contained in SS sleeve within a sealed (welded)								
29	SS tube.								
30	** Fractured clad - Element sealed inside SS tube.								
	Page Total								
	TOTAL			48	4355	859	7515	1633	

GENERAL ATOMIC COMPANY

TRANSFER SERIES: ZGQ-JXT-10

PACKING LIST

(10)

REACTOR NAME: TRIGA

10/25/82

Page 1 of 1

Line No.	Serial No.	Cladding Material	Cask Loc.	Kgs Net	Grams Uranium	Grams U-235	Dose Rate Mr/Hr 3 ft	Dose Rate Mr/Hr 6 ft	Remarks
1	4605	SS	A2	2	192	38	96	24	
2	4604		1	2	191	38	100	25	
3	5866		3	2	191	38	800	200	
4	5626		4	2	192	38	800	200	
5	5627		5	2	189	36	1840	460	
6	6579		6	2	191	37	2400	600	
7	5867		7	2	191	36	4000	1000	
8	5142		8	2	188	33	4000	1000	
9	3935		9	2	186	32	4400	1100	
10	5665		10	2	184	30	4800	1200	
11	3922		11	2	176	19	15200	3800	
12	186	AL *	A1	2	179	35	22	6	Decladded in SS Tube
13	1030	*	2	2	177	35	7	3	
14	1031	*	3	2	174	34	6	2	
15	1679	*	4	2	182	36	6	2	
16	1844	*	5	2	192	38	11	3	
17	2013	*	6	2	179	35	3	1	
18	2023	*	7	2	183	36	2	1	
19	1672	*	8	2	185	37	4	1	
20	1610	*	9	2	182	36	5	2	
21	1839	*	10	2	181	36	7	3	
22	1723	*	11	2	189	37	16	5	
23	130		12	2	184	37	41	5	
24									
25									
26	* Original Al cladding removed. Fuel meat contained								
27	in a sealed (welded) SS Tube								
28									
29									
30									
		Page Total		46	4258	807	38566	9643	
		TOTAL							

GENERAL ATOMIC COMPANY

TRANSFER SERIES: ZGA-JXI-11

PACKING LIST

(14)

REACTOR NAME: TRIGA

10/29/82

Page 1 of 1

Line No.	Serial No.	Cladding Material	Cask Loc.	Kgs Net	Grams Uranium	Grams U-235	Dose Rate Mr/Hr 3 ft	Dose Rate Mr/Hr 6 ft	Remarks
1	1694-	AL	A 1	2	189	37	1200	220	
2	3543-		2	2	183	37	500	100	
3	3188-		3	2	178	36	500	150	
4	1677-		4	2	188	37	300	120	
5	1665-		5	2	187	37	600	160	
6	3535-		6	2	177	35	160	60	
7	2285-		7	2	194	39	7	3	15" meat
8	2246-		8	2	195	39	10	4	" "
9	2270-		9	2	193	38	8	4	" "
10	2276-		10	2	195	39	8	4	" "
11	2278-		11	2	197	39	7	3	" "
12	2303-		12	2	196	39	10	4	" "
13	2271-	*	A 1	2	193	38	5	2	Decked
14	2266-	*	2	2	198	39	7	3	"
15	2268-	*	3	2	193	38	5	2	"
16	1802-	*	4	2	177	35	12	4	"
17	1720-	*	5	2	182	36	15	5	"
18	537-	*	6	2	178	35	8	4	"
19	1970-	*	7	2	158	31	3	1	"
20	1517-	*	8	2	196	39	28	9	"
21	316-	*	9	2	180	36	5	1	"
22	786-	*	10	2	176	35	2	1	"
23	3052-	*	11	2	184	37	2	1	"
24	2272-		12	2	194	38	6	3	15" meat
25									
26									
27	* AL cladding removed - fuel meat contained in a sealed								
28	(welded) SS tube.								
29									
30									
		Page Total		48	4481	889	3408	868	
		TOTAL							

GENERAL ATOMIC COMPANY

(12)

TRANSFER SERIES: ZGO-JXT-12

PACKING LIST

REACTOR NAME: TRIGA

11/3/82

Page 1 of 1

Line No.	Serial No.	Cladding Material	Cask Loc.	Kgs Net	Grams Uranium	Grams U-235	Dose Rate Mr/Hr 3 ft	Dose Rate Mr/Hr 6 ft	Remarks
1	1776	AL	A 1	2	182	36	470	160	
2	6800	↓	↓ 2	2	185	37	-0-	-0-	
3	2419	SS **	B 1	2	183	36	110	33	Declad
4	3312.	SS *	2	2	189	34	1700	410	
5	2369	SS **	3	2	183	36	80	21	
6	1770.	AL *	4	2	191	38	15	4	
7	1771.	AL *	5	2	183	36	12	3	
8	1584.	AL *	6	2	186	37	18	6	
9	1684	AL *	7	2	180	36	18	6	
10	1849	AL *	8	2	186	37	11	4	
11	1583.	AL *	9	2	185	37	16	6	
12									
13									
14									
15	* Removed from the cladding, fuel meat contained								
16	in a sealed (welded) SS tube								
17									
18	** Removed from the cladding, fuel meat contained								
19	in a SS sleeve within a sealed (welded)								
20	SS tube								
21									
22									
23									
24									
25									
26									
27									
28									
29									
30									
		Page Total							
		TOTAL		22	2033	400	2450	653	

2,4 d

GENERAL ATOMIC COMPANY

TRANSFER SERIES: ZGA-JX1[illegible]E

PACKING LIST

REACTOR NAME: TRIGA

2/15/83

(13)

Page 1 of 1

Line No.	Serial No.	Cladding Material	Cask Loc.	Kgs Net	Grams Uranium	Grams U-235	Dose Rate Mr/Hr 3 ft	Dose Rate Mr/Hr 6 ft	Remarks
1	3729	SS *	N/A	2	268	54	4	2	
2									
3									
4									
5									
6									
7									
8									
9									
10									
11									
12	* Removed from original cladding - fuel meat								
13	is broken in two pieces. The pieces have								
14	been placed in a SS sleeve crimped at								
15	one end. The sleeve is sealed within								
16	a SS container.								
17									
18									
19									
20									
21									
22									
23									
24									
25									
26									
27									
28									
29									
30									
		Page Total		2	268	54	4	2	
		TOTAL		2	268	54	4	2	

APPENDIX B

SERIAL NUMBERS OF TRIGA FUEL ELEMENTS FROM THE MICHIGAN STATE TRIGA

MICHIGAN STATE UNIVERSITY

COLLEGE OF ENGINEERING
DIVISION OF ENGINEERING RESEARCH

EAST LANSING • MICHIGAN • 48824-1226

April 25, 1986

Mr. Noah Tomsio
G.A.Technologies
P.O.Box 85608
Slot # 9-091
San Diego, CA 92138

Dear Mr. Tomsio:

The following is the information you requested from the MSU Nuclear Reactor Laboratory.

Element #	Cladding	Status	Weight %	Comments
2374	Stainless	in use	8.5	
2445	"	"	"	
3007	"	"	"	
3017	"	"	"	
3022	"	"	"	
3116	"	"	"	
3134	"	"	"	
3250	"	"	"	
3321	"	"	"	
3328	"	"	"	
3361	"	"	"	
3510	"	"	"	
3675	"	"	"	
3692	"	"	"	
3695	"	"	"	
3697	"	"	"	
3701	"	"	"	
3820	"	"	"	
3821	"	"	"	
3859	"	"	"	
3860	"	"	"	
3863	"	"	"	
3875	"	"	"	
4089	"	"	"	
4096	"	"	"	
4105	"	"	"	
4108	"	"	"	
4128	"	"	"	
4137	"	"	"	
4316	"	"	"	
4317	"	stored	"	
4320	"	in use	"	
4322	"	stored	"	
4326	"	in use	"	

MSU is an Affirmative Action/Equal Opportunity Institution

Element #	Cladding	Status	Weight %	Comments
4344	Stainless	stored	8.5	
4350	"	in use	"	
4717	"	"	"	
4721	"	"	"	
4747	"	"	"	
4987	"	"	"	
4988	"	stored	"	
4994	"	in use	"	
4995	"	"	"	
4996	"	stored	"	
4997	"	in use	"	
5002	"	"	"	
5003	"	"	"	
5004	"	stored	"	
5007	"	in use	"	
5009	"	"	"	
5010	"	"	"	
5012	"	"	"	
5013	"	"	"	
5015	"	"	"	
5023	"	"	"	
5024	"	"	"	
5025	"	"	"	
5030	"	"	"	
5036	"	"	"	
5247	"	stored	"	
5248	"	in use	"	
5250	"	"	"	
5251	"	stored	"	
5252	"	in use	"	
5646	"	stored	"	
5648	"	in use	"	
5663	"	stored	"	
5763	"	in use	"	
5935	"	"	"	
5936	"	stored	"	
5937	"	in use	"	
5943	"	stored	"	
5952	"	in use	"	
5957	"	"	"	
6587	"	"	"	
6591	"	stored	"	
7864	"	in use	12	
7865	"	"	"	
7866	"	"	"	
7867	"	"	"	
7868	"	"	"	
7869	"	"	"	
7832	"	"	"	instrumented
7833	"	"	"	"

Element #	Cladding	Status	Weight	Comment
2041	Aluminum	stored	8	from U of Illinois
2037	"	"	"	"
2089	"	"	"	"
2044	"	"	"	"
2052	"	"	"	"
2042	"	"	"	"
2099	"	"	"	"
2068	"	"	"	"
2119	"	"	"	" Instrumented
2143	"	"	"	" "
2148	"	"	"	" "
2462	"	"	"	" "
2050	"	Shipped	8	to Idaho Falls in 1973
2111	"	"	"	"
2048	"	"	"	"
2067	"	"	"	"
2090	"	"	"	"
2040	"	"	"	"
2091	"	"	"	"
2094	"	"	"	"
2049	"	"	"	"
2095	"	"	"	"
2057	"	"	"	"
2097	"	"	"	"
2106	"	"	"	"
2107	"	"	"	"
2098	"	"	"	"
2053	"	"	"	"
2101	"	"	"	"
2038	"	"	"	"
2078	"	"	"	"
2082	"	"	"	"
2105	"	"	"	"
2073	"	"	"	"
2092	"	"	"	"
2084	"	"	"	"
2064	"	"	"	"
2056	"	"	"	"
2059	"	"	"	"
2062	"	"	"	"
2087	"	"	"	"
2045	"	"	"	"
2093	"	"	"	"
2088	"	"	"	"
2047	"	"	"	"
2060	"	"	"	"
2069	"	"	"	"
2086	"	"	"	"
2066	"	"	"	"
2076	"	"	"	"
2063	"	"	"	"
2113	"	"	"	"
2061	"	"	"	"

Element #	Cladding	Status	Weight %	Comment
2055	Aluminum	Shipped	8	to Idaho Falls in 1973
2110	"	"	"	"
2054	"	"	"	"
2114	"	"	"	"
2102	"	"	"	"
2081	"	"	"	"
2112	"	"	"	"
2100	"	"	"	"
2043	"	"	"	"
2080	"	"	"	"
2046	"	"	"	"
2236	"	"	"	"

All stainless steel clad fuel was shipped to MSU in the fall of 1973 from General Atomic as irradiated fuel. The only exceptions were the stainless steel clad instrumented elements that are in use now, they were shipped new.

I hope this is helpful to you.

Sincerely,

Mark Mitchell
Senior Reactor Operator

APPENDIX C
TRIGA SPENT FUEL SHIPMENT DATA FROM CORNELL UNIVERSITY

SCHOOL OF APPLIED AND ENGINEERING PHYSICS
COLLEGE OF ENGINEERING

Cornell University

ITHACA, NEW YORK 14850

Address reply to:
WARD LABORATORY OF NUCLEAR ENGINEERING

April 11, 1974

Dr. R. E. Commander
Idaho Operations
Allied Chemical Company
Idaho Chemical Processing Plant
Idaho Falls, Idaho 83401

Dear Dr. Commander:

Enclosed is a list of 26 aluminum clad TRIGA fuel elements being sent to you in the second and final delivery, totaling 64 elements. Also enclosed is a loading chart showing the location of the elements in the cask.

A copy of this letter and enclosure will be hand carried by the Tri-State driver.

If you have any questions regarding this shipment, please let us know.

Sincerely yours,

Howard C. Aderhold
Reactor Supervisor

HCA:anv

Enclosures

cc: Professor D. D. Clark, Director

CORNELL UNIVERSITY

WARD REACTOR LABORATORY

SHIPMENT OF 26 ALUMINUM CLAD TRIGA FUEL
ELEMENTS TO ALLIED CHEMICAL, IDAHO FALLS

Date of shipment: April ~~18~~ 12, 1974

Total uranium content at fabrication: 4727.10 grams

Total U-235 content at fabrication: 945.42 grams

Percent enrichment: 20

Date of reactor shut down: March 22, 1974

Total megawatt hours: 169

Element Number	Original U-235	Net U-235	Element Number	Original U-235	Net U-235
2083	37.38	37.1	2341	36.33	36.0
3072	36.40	36.1	2185	36.33	36.0
2330	37.09	36.7	2206	36.24	35.8
2165	36.95	36.6	2221	36.01	35.7
2153	36.83	36.5	2238	35.96	35.6
2213	36.96	36.6	2126	35.95	35.6
2218	36.80	36.5	2179	35.94	35.5
2039	36.81	36.5	2203	35.94	35.5
2219	36.78	36.4	2178	35.90	35.5
2242	36.47	36.2	2129	35.88	35.5
2189	36.46	36.2	2224	35.87	35.6
2193	36.37	36.1	2223	35.82	35.4
2232	36.37	36.1	3074	35.58	35.3

Form AEC-741
(11/69)
AECM 7401/10 CFR 40 and 70

Form Approved
Bureau of Budget
No. 38-R0114

U.S. ATOMIC ENERGY COMMISSION

NUCLEAR MATERIAL TRANSFER REPORT

DOCUMENTATION (Only if document is classified Secret)

Page 1 of 1 Pages Copy 5 of 5 Copies, Series

1. (1)	2. Transfer Code (2)	(3)	(4)	3. Transfer Series: AIS From (5-7) ZES	AIS To (9-11) JSA	No. (13-18) 2	(19)	4. No. of Lines (20-21)

5. Nature of Transaction Complete if Applicable (22)
Transaction Type B
Transaction Type
Transaction Type

6. Name and Address of Shipper — Lic. No. R-80
Cornell University
Ward Reactor Laboratory
Ithaca, New York 14850
Attn: H. C. Aderhold

7. Name and Address of Receiver — Lic. No.
Allied Chemical Company
% Aerojet Nuclear Company
Idaho Chemical Processing Plant
Attention: Idaho Falls, Idaho 83401
D. G. Sage

8. Shipped for Account of — AIS ZES (23-25)
same as above

9. Shipped to Account of — AIS JSA (26-28)
same as above

10. Date of Transfer of Financial Responsibility: Mo. (29-30) Day (31-32) Yr. (33)

11. Material Type and Description
U-235 in 26 irradiated UZr TRIGA elements

12. Transfer Authority—SNM Draft Number, Reference, or Order Number (34-50)
Exclusive use Tri-State Motor Transit Corp., DOT SP5957

NO.	Distribution of Copies
1	JSA-ZES
2	JSA
3	JSA-QFA
4	QFA
5	ZES
6	
7	
8	
9	
10	

13. SHIPPER'S DATA

A. Date Shipped: Mo. (70-71) 4 Day (72-73) 19 Yr. (74) 74
B. Form No. (75) A
C. Signature of Authorized Official and Date Signed: H. C. Aderhold April 22, 1974 H. C. Aderhold, Reactor Supervisor

Line No. (20-21) D	AEC Project Number and Identification (22-31) E	Material Type (32-33) F	Material Descrip. Code G	Composition Code (34-36) H	Owner Code (37) I	Gross Weight J	Net Weight K	Element Weight (40-50) L	Weight % Isotope (51-54) M	Isotope Weight (55-65) N	Limits of Error: Element (66-70) O	Isotope (71-75) P
	Cornell TRIGA	20	F		A		58,916	4776	19.61	937		

14. RECEIVER'S DATA

A. Date Received: Mo. (70-71) Day (72-73) Yr. (74)
B. Form No. (75) A
C. Signature of Authorized Official and Date Signed

Line No. (20-21) D	AEC Project Number and Identification (22-31) E	Material Type (32-33) F	Material Descrip. Code G	Composition Code (34-36) H	Owner Code (37) I	Gross Weight J	Net Weight K	Element Weight (40-50) L	Weight % Isotope (51-54) M	Isotope Weight (55-65) N	Limits of Error: Element (66-70) O	Isotope (71-75) P

18 U.S.C., SECTION 1001; ACT OF JUNE 25, 1948; 62 STAT. 749; MAKES IT A CRIMINAL OFFENSE TO MAKE A WILLFULLY FALSE STATEMENT OR REPRESENTATION TO ANY DEPARTMENT OR AGENCY OF THE UNITED STATES AS TO ANY MATTER WITHIN ITS JURISDICTION.

GPO 887-815

[illegible]94 1245EDT

[illegible] 2 IDAHO FALLS IDAHO APRIL 4
[illegible] 2083268111-4241
ATTN [illegible] COMMANDER , IDAHO OPERATIONS
ET
TO: R.E. COMMANDER
IDAHO OPERATIONS
ALLIED CHEMICAL
IDAHO CHEMICAL PROCESSING PLANT
IDAHO FALLS, IDAHO 83401

SUBJECT: SHIPMENT OF 38 ALUMINUM CLAD TRIGA FUEL ELEMENTS FORM CORNELL UNIVERSITY

DATE OF SHIPMENT: MARCH 31, 1974

TOTAL URANIUM CONTENT AT FABRICATION: 6875 GRAMS

TOTAL U-235 CONTENT AT FABRICATION: 1375 GRAMS

PERCENT ENRICHMENT: 20

DATE OF REACTOR SHUTDOWN: MARCH 22, 1974

TOTAL MEGAWATT HOURS: 240

IDENTIFICATION OF EACH FUEL ELEMENT, GIVING SERIAL NUMBER, ORIGINAL U-235 CONTENT AND NET U-235 CONTENT:

ELEMENT NO. 948

ELEMENT NO.	ORIGINAL U-235	NET U-235
2125	35.68	35.4
3075	36.17	35.9
2518	36.50	36.2
2234	35.36	35.1
2194	35.48	35.2
1793	38.14	37.8
1627	37.06	36.8
2065	37.68	37.4
2186	35.40	35.1
3079	36.41	35.1
2096	36.02	35.7
2329	36.47	36.2
2239	36.51	36.2
2230	35.53	35.2
2237	36.04	35.7
2150	37.73	37.4
2222	35.59	35.3
2217	36.04	35.7
2228	35.65	35.4
2235	35.82	35.5
2195	35.71	35.4
2251	36.05	35.8
2211	36.51	36.2
2243	35.77	35.5
2128	36.65	36.2
2342	35.79	35.5
2617	36.50	36.2
2167	36.95	36.7
2216	36.10	35.8
2205	35.49	35.2
2220	36.73	36.4
2150	37.03	36.7
2225	36.07	35.8
2192	35.71	35.4
2215	36.15	35.9
2191	35.71	35.4
2227	35.64	35.3
2214	35.55	35.3
		1363.2

HOWARD C. ADERHOLD
CORNELL UNIVERSITY

REF: FACILITY LICENSE NO. R-80

LAST LINE: SHOULD HAVE BEEN 35.3
NNNN

Form AEC-741
(11/69)
AECM 7401/10 CFR 40 and 70

Form Approved
Bureau of Budget
No. 38 R3744

U.S. ATOMIC ENERGY COMMISSION

NUCLEAR MATERIAL TRANSFER REPORT

DOCUMENTATION (Only if document is classified Secret)

Page of Pages Copy of Copies, Series

1. (1)	2. Transfer Code (2) (3) (4)	3. Transfer Series: RIS From (5-7)	RIS To (9-11)	No. (13-18)	(19)	4. No. of Lines (20-21)
1		ZES	JSA	1		

5. Nature of Transaction Complete if Applicable (22)

Transaction Type [n]

Transaction Type [ ]

Transaction Type [ ]

6. Name and Address of Shipper — Lic. No. R-80

Cornell University
Ward Reactor Laboratory
Ithaca, New York 14850
Attention: H. C. Aderhold

7. Name and Address of Receiver — Lic. No.

Allied Chemical Company
% Aerojet Nuclear Company
Idaho Chemical Processing Plant
Attention: D.G. Sage
Idaho Falls, Idaho 83401

8. Shipped for Account of — RIS ZES (23-25)

Same as above

9. Shipped to Account of — RIS JSA (26-28)

Same as above

10. Date of Transfer of Financial Responsibility — Mo. (29-30) Day (31-32) Yr. (33)

NO.	Distribution of Copies
1	JSA-ZES
2	JSA
3	JSA-OFA
4	OFA
5	ZES
6	
7	
8	
9	
10	

11. Material Type and Description

U-235 in 38 irradiated UZR TRIGA elements

12. Transfer Authority—Still Draft Number, Reference, or Order Number (34-50)

Exclusive use Tri-State Motor Transit Corp., DOT SP5957

13. SHIPPER'S DATA

A. Date Shipped: Mo. (70-71) 4 Day (72-73) 1 Yr. (74) 74

B. Form No. (75): 4

C. Signature of Authorized Official and Date Signed: April 19, 1974 H. C. Aderhold, Reactor Supervisor

Line No. (20-21) D	AEC Project Number and Identification (22-31) E	Material Type (32-33) F	Material Descrip. Code G	Composition Code (34-36) H	Owner Code (37) I	Gross Weight J	Net Weight K	Element Weight (40-50) L	Weight % Isotope (51-54) M	Isotope Weight (55-65) N	Limits of Error: Element (66-70) O	Isotope (71-75) P
	Cornell TRIGA	20	F		A		86,108	6930	19.65	1363		

14. RECEIVER'S DATA

A. Date Received: Mo. (70-71) Day (72-73) Yr. (74)

B. Form No. (75): 4

C. Signature of Authorized Official and Date Signed

Line No. (20-21) D	AEC Project Number and Identification (22-31) E	Material Type (32-33) F	Material Descrip. Code G	Composition Code (34-36) H	Owner Code (37) I	Gross Weight J	Net Weight K	Element Weight (40-50) L	Weight % Isotope (51-54) M	Isotope Weight (55-65) N	Limits of Error: Element (66-70) O	Isotope (71-75) P

18 U.S.C., SECTION 1001; ACT OF JUNE 25, 1948; 62 STAT. 749; MAKES IT A CRIMINAL OFFENSE TO MAKE A WILLFULLY FALSE STATEMENT OR REPRESENTATION TO ANY DEPARTMENT OR AGENCY OF THE UNITED STATES AS TO ANY MATTER WITHIN ITS JURISDICTION.

GPO 897-815

APPENDIX D

SERIAL NUMBERS AND BURNUP DATA ON UNIVERSITY OF TEXAS TRIGA REACTOR SPENT FUEL SHIPPED TO THE IDAHO NATIONAL ENGINEERING LABORATORY

shipped from UT
8/73
to Idaho Falls

THE UNIVERSITY OF TEXAS AT AUSTIN
NUCLEAR REACTOR LABORATORY

Aluminum TRIGA Mark I Fuel

	grams URANIUM	grams U-235	Burnup MW-hrs	Burnup grams	Remaining U-235 grams
1570	185.58	36.76	260.5	0.19	36.57
1585	193.29	38.30	190.8	0.14	38.16
1593	180.05	35.67	260.5	0.19	35.48
1622	185.42	36.73	260.5	0.19	36.54
1638	184.21	36.49	189.0	0.14	36.35
1659	188.05	37.25	260.5	0.19	37.06
1692	192.96	38.23	189.0	0.14	38.09
1781	175.78	34.82	190.8	0.14	34.68
1782	185.64	36.78	190.8	0.14	36.64
1783	188.43	37.33	260.5	0.19	37.14
1795	189.05	37.45	190.8	0.14	37.31
1815	187.32	37.11	260.5	0.19	36.92
2729	184.35	36.87	246.2	0.18	36.69
2741	188.85	37.77	246.2	0.18	37.59
2756	175.37	35.07	246.2	0.18	34.89
2774	175.26	35.05	246.2	0.18	34.87
2785	190.27	38.05	246.2	0.18	37.87
2786	181.62	36.32	176.5	0.13	36.19
2787	180.20	36.04	176.5	0.13	35.91
2790 TC	187.91	37.58	246.2	0.18	37.40
3023	197.04	39.41	176.5	0.13	39.28
3024	181.06	36.21	246.2	0.18	36.03
3025	179.28	35.86	246.2	0.18	35.68
3026	181.37	36.27	246.2	0.18	36.09
3027	180.49	36.10	246.2	0.18	35.92
3028	179.50	35.90	176.5	0.13	35.77
3029	185.32	37.08	246.2	0.18	36.90
3030	183.35	36.67	246.2	0.18	36.49
3031	182.32	36.46	246.2	0.18	36.28
3032	180.45	36.09	246.2	0.18	35.91
3033	179.28	35.86	246.2	0.18	35.68
3034	184.92	36.98	246.2	0.18	36.80
3035	178.74	35.75	176.5	0.13	35.62
3036	176.31	35.36	176.5	0.13	35.23
3037	180.35	36.07	246.2	0.18	35.89
3038	184.22	36.84	176.5	0.13	36.71
3039	181.56	36.31	246.2	0.18	36.13
3040	184.22	36.34	176.5	0.13	36.71
3041	182.97	36.59	176.5	0.13	36.46
3042	175.64	35.13	246.2	0.18	34.95
3043	188.27	37.65	176.5	0.13	37.52
3044	182.70	36.54	176.5	0.13	36.41
3045 TC	186.44	37.29	246.2	0.18	37.11
3046	180.20	36.04	176.5	0.13	35.91
3047	180.80	36.16	246.2	0.18	35.98
3048	183.99	36.80	246.2	0.18	36.62
3049	178.93	35.79	176.5	0.13	35.66
3050	188.44	37.69	176.5	0.13	37.56
3051	184.70	36.94	176.5	0.13	36.81
3053	184.48	36.90	246.2	0.18	36.72
3054	177.92	35.58	246.2	0.18	35.40
3055	173.75	34.75	246.2	0.18	34.57

Shipped from UT
8/73

THE UNIVERSITY OF TEXAS AT AUSTIN
NUCLEAR REACTOR LABORATORY

Aluminum TRIGA Mark I fuel continued

	grams URANIUM	grams U-235	Burnup MW-hrs	Burnup grams	Remaining U-235 grams			
3056	182.05	36.41	176.5	0.13	36.28			
3057	182.15	36.43	176.5	0.13	36.30			
3058	179.90	35.98	176.5	0.13	35.85			
3059	180.77	36.15	246.2	0.18	35.97			
3060	180.05	36.01	176.5	0.13	35.88			
3061	188.18	37.64	176.5	0.13	37.51			
3062	178.70	35.74	176.5	0.13	35.61			
3066	183.66	36.73	52.0	0.04	36.69			
3078	187.57	37.51	52.0	0.04	37.47			
3761	183.37	36.67	52.0	0.04	36.63			

APPENDIX E

SERIAL NUMBERS AND HEAVY METAL LOADINGS OF TRIGA SPENT FUEL FROM KANSAS STATE UNIVERSITY TO THE IDAHO NATIONAL ENGINEERING LABORATORY

SHIPPED TO INEL EXCEPT AS NOTED

KANSAS CORE

Birdcage	Element	Alloy	Uranium	U-235
1	2736E	2249.82	164.24	32.70
	2207E	2252.84	173.24	34.49
	2774E	2252.10	175.21	34.88
	2756E	2262.50	175.34	34.91
	2764E	2248.70	175.85	35.01
	2784E	2257.92	176.57	35.16
	2760E	2263.03	176.74	35.19
		15786.91	1217.19	242.34
2	2727E	2259.58	176.93	35.23
	2137E	2252.86	178.43	35.53
	2768E	2254.77	179.03	35.64
	2783E	2252.94	179.33	35.70
	2738E	2256.46	179.39	35.72
	2771E	2243.33	179.47	35.73
	2772E	2253.09	179.80	35.80
		15773.03	1252.38	249.35
3	2773E	2259.80	179.88	35.81
	2766E	2255.49	179.99	35.84
	2754E	2263.30	180.16	35.87
	2742E	2263.52	180.40	35.92
	2770E	2255.26	180.42	35.92
	2776E	2245.63	180.55	35.95
	2746E	2258.30	180.66	35.97
		15801.30	1262.06	251.28
4	2748E	2258.73	180.70	35.98
	2753E	2265.04	180.75	35.99
	2733E	2256.66	180.98	36.03
	2781E	2263.25	181.29	36.09
	2728E	2245.15	181.63	36.16
	2735E	2257.52	181.73	36.18
	2720E	2249.72	182.00	36.24
		15796.07	1269.08	252.67
5	2725E	2262.46	182.13	36.26
	2730E	2261.33	182.26	36.29
	2751E	2259.13	182.31	36.30
	2719E	2253.48	182.31	36.30
	2740E	2263.22	182.42	36.32
	2726E	2257.63	182.64	36.36
	2765E	2250.28	182.72	36.38
		15807.53	1276.79	254.21
6	2737E	2259.86	182.82	36.40
	2743E	2259.85	183.05	36.45
	2780E	2248.28	183.23	36.48
	2782E	2263.99	183.36	36.51
	2767E	2255.37	183.36	36.51
	2755E	2255.57	183.60	36.55
	2763E	2260.74	183.57	36.55
		15803.66	1283.01	255.45

Birdcage	Element	Alloy	Uranium	U-235
7	D82775E-23	2249.08	183.75	36.58
	D72722E-22	2258.94	184.56	36.75
	D62778E-21	2252.10	184.67	36.77
	D52750E-20	2260.47	184.91	36.82
	D42721E-19	2264.94	185.05	36.84
	D32723E-18	2258.04	185.16	36.87
	D22752E-17	2261.20	185.42	36.92
		15604.77	1293.52	257.55
8	RETIRED D12749E-16	2259.18	185.48	36.93
	C12745E-15	2261.78	185.47	36.93
	C112734E-14	2259.58	185.51	36.94
	C102762E-13	2264.26	185.67	36.97
	C92769E-12	2259.35	185.72	36.98
	C82731E-11	2261.38	186.34	37.10
	C72759E-10	2259.03	186.37	37.11
		15624.56	1300.56	258.96
9	C62747E-9	2266.49	186.53	37.14
	C52761E-8	2250.85	186.60	37.15
	C42739E-7	2268.93	186.96	37.22
	C22757E-6	2264.48	187.05	37.24
	C12779E-5	2252.82	187.89	37.41
	B62724E-4	2257.89	188.31	37.49
	B42777E-3	2248.39	188.64	37.56
		15809.85	1311.98	261.21
10	B2-2732E-2	2260.35	191.00	38.03
	B1-2744E-1	2267.76	191.40	38.11

APPENDIX F

SERIAL NUMBERS AND HEAVY METAL LOADINGS OF TRIGA SPENT FUEL FROM WESTINGHOUSE HANFORD TO ROCKWELL HANFORD AND THE IDAHO NATIONAL ENGINEERING LABORATORY

Serial No.

FIRST SHIPMENT TO ROCKWELL HANFORD

	Fuel Element Number	Uranium Weight (Grams)	Wt. % U-235	U-235 Weight (Grams)	Pu-239 Weight (Grams)
T05210D210	•4665	190.531	19.130	36.449	0.155
	•4669	190.531	19.130	36.449	0.155
	•4619	190.531	19.130	36.449	0.155
	•4671	190.531	19.130	36.449	0.155
	•4659	190.531	19.130	36.449	0.155
	•4628	190.531	19.130	36.449	0.155
	•4616	190.664	19.190	36.589	0.141
	•4661	190.531	19.130	36.449	0.155
	•4662	190.531	19.130	36.449	0.155
	•4738	191.751	19.680	37.737	0.026
	•4625	190.531	19.130	36.449	0.155
	•4660	190.531	19.130	36.449	0.155
	•4630	190.776	19.240	36.706	0.129
	•4653	190.531	19.130	36.449	0.155
	•4631	190.531	19.130	36.449	0.155
	•4633	190.531	19.130	36.449	0.155
	•4629	190.531	19.130	36.449	0.155
	•4642	190.531	19.130	36.449	0.155
	•4641	190.531	19.130	36.449	0.155
	•4636	190.531	19.130	36.449	0.155
	•4620	190.531	19.130	36.449	0.155
	•4732	191.329	19.491	37.291	0.071
	•4618	191.531	19.552	37.449	0.155
	•4670	190.531	19.130	36.449	0.155
	•4664	191.531	19.552	37.449	0.155
	•4663	191.531	19.552	37.449	0.155
	•4623	190.640	19.226	36.662	0.144
T05210D210	•4725	190.666	19.191	36.590	0.140
	TOTALS:	5340.508		1026.353	4.061
		28 EA			

NET WEIGHT (LBS.): 210.0

Received from Oregon State University these are being sent to the Rockwell-Hanford Company for retrievable storage in June 1986. Element 4734 was a leaker and was previously buried.

6.12/6/86

Serial No.

SECOND SHIPMENT TO ROCKWELL HANFORD

	Fuel Element Number	Uranium Weight (Grams)	Wt. % U-235	U-235 Weight (Grams)	Pu-239 Weight (Grams)	
TOS 210D210	•4635	190.531	19.130	36.449	0.155	
	•4634	190.531	19.130	36.449	0.155	
	•4643	190.531	19.130	36.449	0.155	
	•4644	190.531	19.130	36.449	0.155	
	•4609	190.531	19.130	36.449	0.155	
	•4615	190.531	19.130	36.449	0.155	
	•4621	190.531	19.130	36.449	0.155	
	•4622	190.640	19.179	36.562	0.144	
	•4612	190.531	19.130	36.449	0.155	
	~~•4734~~	~~192.041~~	~~19.589~~	~~37.776~~	~~0.122~~	SHIPPED TO HUA-VRA 3
	•4617	190.531	19.130	36.449	0.155	
	•4638	190.531	19.130	36.449	0.155	Buried at Rockwell
	•4608	191.531	19.552	37.449	0.155	
	•4741	191.531	19.552	37.449	0.155	9/17/84
	•4658	191.531	19.552	37.449	0.155	
	•4647	191.531	19.552	37.449	0.155	
	•4678	190.666	19.191	36.590	0.140	
	•4614	191.531	19.552	37.449	0.155	
	•4632	191.531	19.552	37.449	0.155	
	•4677	190.666	19.191	36.590	0.140	
	•4674	190.604	19.163	36.525	0.148	
	•4673	191.531	19.552	37.449	0.155	
	•4737	191.691	19.652	37.673	0.033	
	•4730	190.666	19.191	36.590	0.140	
	•4668	191.531	19.552	37.449	0.155	
	•4724	190.666	19.191	36.590	0.140	
	•4731	190.666	19.191	36.590	0.140	
	•4676	190.666	19.191	36.590	0.140	
	•4728	190.666	19.191	36.590	0.140	
	•4639	190.531	19.130	36.449	0.155	
	•4610	190.531	19.130	36.449	0.155	
	•4645	190.531	19.130	36.449	0.155	
	4749	192.000	19.792	38.000	0.000	
	•4736	192.000	19.792	38.000	0.000	
TOS 210D210	•4651	191.979	19.782	37.979	0.002	
	TOTALS:	6535.568		1252.573	4.684	

Fabricated in Dec. 1967, all others were fabricated in January 1967.

35 29

34 REMAINING

NET WEIGHT (LBS.): 262.5

Serial No.

THIRD SHIPMENT To ROCKWELL HANFORD

	Fuel Element Number	Uranium Weight (Grams)	Wt. % U-235	U-235 Weight (Grams)	Pu-239 Weight (Grams)
TOS210D210	4613	190.531	19.130	36.449	0.155
	4652	190.531	19.130	36.449	0.155
	4646	190.531	19.130	36.449	0.155
	4648	190.531	19.130	36.449	0.155
	4655	190.531	19.130	36.449	0.155
	4656 ?	190.531	19.130	36.449	0.155
	4654	190.531	19.130	36.449	0.155
	4624	190.531	19.130	36.449	0.155
	4650	190.531	19.130	36.449	0.155
	4667	190.531	19.130	36.449	0.155
	4625	190.531	19.130	36.449	0.155
	4739	191.751	19.680	37.737	0.026
	4611	190.531	19.130	36.449	0.155
	4733	191.492	19.564	37.464	0.054
	4735	191.492	19.564	37.464	0.054
	4666	190.640	19.130	36.562	0.144
	4672	190.552	19.140	36.471	0.153
	4675	190.628	19.174	36.551	0.145
	4740	190.531	19.130	36.449	0.155
	4640	190.531	19.130	36.449	0.155
	4657	190.531	19.130	36.449	0.155
	4727	190.666	19.191	36.590	0.140
	4729	190.666	19.191	36.590	0.140
	4637	191.531	19.552	37.449	0.155
	4649	191.531	19.552	37.449	0.155
	4723	190.666	19.191	36.590	0.140
	4722	190.666	19.191	36.590	0.140
TOS210D210	4726	190.666	19.191	36.590	0.140
	TOTALS:	5340.912 28 EA		1026.832	3.911

NET WEIGHT (LBS.): 210

(Serial No.)

JUNE 19, 1979

UNCLASSIFIED
SAFEGUARDS AND MATERIALS MANAGEMENT
MATERIAL BALANCE AREA 219
RADIOMET THIGIA — ENDING INVENTORY REPORT — GRAM UNITS

LOCATION ITEM IDENT	MATERIAL CATEGORY	PERCENT PU240	ISOTOPE PERCENT	PROJECT NUMBERS	LINE NUMBER	BLDG NUMBER	NET WEIGHTS	FACTOR PERCENT	ELEMENT WEIGHT ROUNDED	ELEMENT WEIGHT ACTUAL
883	20		19.78	410	392	327	95.38	100.00	95.	95.38
	TOTALS FOR		19.78	410	392	327			95.	95.38
2893	20		19.87	410	392	327	183.59	100.00	184.	183.59
2629	20		19.87	410	392	327	182.52	100.00	183.	182.52
2645	20		19.87	410	392	327	182.51	100.00	183.	182.51
2830	20		19.87	410	392	327	182.27	100.00	182.	182.27
2875	20		19.87	410	392	327	182.21	100.00	182.	182.21
2882	20		19.87	410	392	327	181.95	100.00	182.	181.95
2879	20		19.87	410	392	327	181.38	100.00	181.	181.38
2885	20		19.87	410	392	327	193.12	100.00	193.	193.12
2865	20		19.87	410	392	327	188.02	100.00	188.	188.02
2852	20		19.87	410	392	327	181.85	100.00	182.	181.85
2857	20		19.87	410	392	327	186.50	100.00	187.	186.50
2830	20		19.87	410	392	327	180.37	100.00	180.	180.37
2887	20		19.87	410	392	327	178.14	100.00	178.	178.14
2861	20		19.87	410	392	327	177.48	100.00	177.	177.48
2856	20		19.87	410	392	327	186.64	100.00	187.	186.64
	TOTALS FOR		19.87	410	392	327			2749.	2748.55
4962	20		19.90	410	392	327	191.00	100.00	191.	191.00
4963	20		19.90	410	392	327	191.00	100.00	191.	191.00
	TOTALS FOR		19.90	410	392	327			382.	382.00
2716	20		19.97	410	392	327	196.75	100.00	197.	196.75
2287	20		19.97	410	392	327	194.94	100.00	195.	194.94
	TOTALS FOR		19.97	410	392	327			392.	391.69

Shipped to WINCO in Idaho Falls, ID June 1979

ENRICHED URANIUM	3618.	3617.62
ENRICHED URANIUM 20% OR GREATER	0.	.00
ENRICHED URANIUM LESS THAN 20%	3618.	3617.62

Serial No.

UNCLASSIFIED
SAFEGUARDS AND MATERIALS MANAGEMENT
MATERIAL BALANCE AREA 219
ENDING INVENTORY REPORT

MAY 30, 1979

RADIONET TRIGIA

GRAM UNITS

LOCATION ITEM IDENT	MATERIAL CATEGORY	PERCENT PU240	ISOTOPE PERCENT	PROJECT NUMBERS	LINE NUMBER	BLDG NUMBER	NET WEIGHTS	FACTOR PERCENT	WEIGHT ACTUAL	IS ROUN.
2880	20		19.87	410	392	327	182.03	100.00	182.03	
2872	20		19.87	410	392	327	181.52	100.00	181.52	
2873	20		19.87	410	392	327	181.35	100.00	181.35	
2836	20		19.87	410	392	327	180.47	100.00	180.47	
2847	20		19.87	410	392	327	180.24	100.00	180.24	
2844	20		19.87	410	392	327	184.24	100.00	184.24	
2858	20		19.87	410	392	327	188.89	100.00	188.89	
2888	20		19.87	410	392	327	188.29	100.00	188.29	
2869	20		19.87	410	392	327	188.21	100.00	188.21	
2878	20		19.87	410	392	327	184.90	100.00	184.90	
2886	20		19.87	410	392	327	184.83	100.00	184.83	
2853	20		19.87	410	392	327	184.35	100.00	184.35	
2889	20		19.87	410	392	327	183.38	100.00	183.38	
2848	20		19.87	410	392	327	183.01	100.00	183.01	
	TOTALS FOR		19.87	410	392	327			2575.71	
2717	20		19.97	410	392	327	192.99	100.00	192.99	
2476	20		19.97	410	392	327	202.25	100.00	202.25	
2605	20		19.97	410	392	327	194.04	100.00	194.04	
2598	20		19.97	410	392	327	193.44	100.00	193.44	
2487	20		19.97	410	392	327	196.34	100.00	196.34	
2592	20		19.97	410	392	327	197.90	100.00	197.90	
	TOTALS FOR		19.97	410	392	327			1176.96	

ENRICHED URANIUM 3752.67

ENRICHED URANIUM 20% OR GREATER .00

ENRICHED URANIUM LESS THAN 20% 3752.67

END OF REPORT

NUMBER OF CARDS = 20

UNCLASSIFIED

APPENDIX G
FISSION PRODUCT NUCLIDES
(Computer Output)

TABLE G-1
TRIGA SPENT FUEL ACTIVITY - 10 THROUGH 60 DAYS
(Average Power Element)
1.00 MWT CORE
LEVEL A FUEL ACTIVITY (CURIES)

NUCLIDE	HALFLIFE	CORE EQUILIBRIUM	AVERAGE POWER ELEMENT AFTER 2.000 YEARS OPERATION INITIAL	10 DAY DECAY	30 DAY DECAY	60 DAY DECAY
H3	12.3-Y	9.08+00	9.08-02	9.07-02	9.04-02	9.00-02
C14	5730-Y	0.00	0.00	0.00	0.00	0.00
GE79	43.0-S	3.62+02	3.62+00	0.00	0.00	0.00
AS79	9.0-M	3.85+02	3.85+00	0.00	0.00	0.00
SE79M	3.89-M	3.85+02	3.85+00	0.00	0.00	0.00
SE81	18.5-M	1.66+03	1.66+01	0.00	0.00	0.00
SE83M	70.-S	2.17+03	2.17+01	0.00	0.00	0.00
SE83	22.5-M	2.22+03	2.22+01	0.00	0.00	0.00
BR83	2.4-H	4.56+03	4.56+01	0.00	0.00	0.00
KR83M	1.86-H	4.56+03	4.56+01	0.00	0.00	0.00
SE84	3.3-M	8.04+03	8.04+01	0.00	0.00	0.00
BR84	31.8-M	8.25+03	8.25+01	0.00	0.00	0.00
BR85	2.87-M	1.11+04	1.11+02	0.00	0.00	0.00
KR85M	4.48-H	1.11+04	1.11+02	0.00	0.00	0.00
KR85	10.73Y	2.96+02	2.96+00	2.96+00	2.95+00	2.93+00
KR87	76.-M	2.14+04	2.14+02	0.00	0.00	0.00
KR88	2.8-H	3.02+04	3.02+02	0.00	0.00	0.00
RB88	17.7-M	3.09+04	3.09+02	0.00	0.00	0.00
KR89	3.16-M	3.91+04	3.91+02	0.00	0.00	0.00
RB89	15.2-M	4.12+04	4.12+02	0.00	0.00	0.00
SR89	50.5-D	4.15+04	4.15+02	3.62+02	2.75+02	1.82+02
KR90	32.3-S	4.29+04	4.29+02	0.00	0.00	0.00
RB90M	4.28-M	1.06+04	1.06+02	0.00	0.00	0.00
RB90	2.7-M	3.99+04	3.99+02	0.00	0.00	0.00
SR90	29.-Y	2.35+03	2.35+01	2.35+01	2.34+01	2.34+01
Y90	64.-H	2.35+03	2.35+01	2.35+01	2.34+01	2.34+01
KR91	9.0-S	2.90+04	2.90+02	0.00	0.00	0.00
RB91	58.5-S	4.82+04	4.82+02	0.00	0.00	0.00
SR91	9.48-H	5.04+04	5.04+02	1.21-05	0.00	0.00
Y91	53.6-D	5.04+04	5.04+02	4.51+02	3.56+02	2.50+02

TABLE G-1 (Continued)

1.00 MWT CORE
LEVEL A FUEL ACTIVITY (CURIES)

NUCLIDE	HALFLIFE	CORE EQUILIBRIUM	AVERAGE POWER ELEMENT AFTER 2.000 YEARS OPERATION INITIAL	10 DAY DECAY	30 DAY DECAY	60 DAY DECAY
SR92	2.71-H	5.03+04	5.03+02	0.00	0.00	0.00
Y92	3.53-H	5.07+04	5.07+02	0.00	0.00	0.00
SR93	7.5-M	5.31+04	5.31+02	0.00	0.00	0.00
Y93	10.2-H	5.43+04	5.43+02	4.52-05	0.00	0.00
SR94	1.29-M	5.12+04	5.12+02	0.00	0.00	0.00
Y94	19.0-M	5.45+04	5.45+02	0.00	0.00	0.00
Y95	10.5-M	5.46+04	5.46+02	0.00	0.00	0.00
ZR95	65.5-D	5.52+04	5.52+02	4.97+02	4.02+02	2.93+02
NB95M	3.61-D	5.52+02	5.52+00	8.10-01	1.74-02	5.49-05
NB95	35.1-D	5.52+04	5.52+02	5.47+02	5.14+02	4.36+02
Y96	6.0-S	5.11+04	5.11+02	0.00	0.00	0.00
ZR97	16.8-H	5.04+04	5.04+02	2.53-02	0.00	0.00
NB97	73.6-M	5.05+04	5.05+02	2.72-02	0.00	0.00
NB98	51.0-M	1.79+02	1.79+00	0.00	0.00	0.00
NB99M	2.5-M	1.76+04	1.76+02	0.00	0.00	0.00
NB99	14.0-S	3.38+04	3.38+02	0.00	0.00	0.00
MO99	66.02H	5.20+04	5.20+02	4.19+01	2.72-01	1.42-04
TC99M	6.02-H	4.58+04	4.58+02	4.15+01	2.69-01	1.40-04
NB100M	7.0-S	2.61+04	2.61+02	0.00	0.00	0.00
NB100	2.9-M	2.61+04	2.61+02	0.00	0.00	0.00
MO101	14.6-M	4.31+04	4.31+02	0.00	0.00	0.00
TC101	14.2-M	4.31+04	4.31+02	0.00	0.00	0.00
MO102	11.1-M	3.60+04	3.60+02	0.00	0.00	0.00
TC102M	4.3-M	3.60+04	3.60+02	0.00	0.00	0.00
MO103	60.-S	2.52+04	2.52+02	0.00	0.00	0.00
RU103	39.6-D	2.59+04	2.59+02	2.17+02	1.53+02	9.05+01
RH103M	56.-M	2.56+04	2.56+02	2.17+02	1.53+02	9.06+01
MO104	1.6-M	1.51+04	1.51+02	0.00	0.00	0.00
TC104	18.-M	1.56+04	1.56+02	0.00	0.00	0.00
TC105	8.0-M	8.20+03	8.20+01	0.00	0.00	0.00

TABLE G-1 (Continued)

1.00 MWT CORE
LEVEL A FUEL ACTIVITY (CURIES)

NUCLIDE	HALFLIFE	CORE EQUILIBRIUM	AVERAGE POWER ELEMENT AFTER 2.000 YEARS OPERATION INITIAL	10 DAY DECAY	30 DAY DECAY	60 DAY DECAY
RU105	4.44-H	8.22+03	3.22+01	0.00	0.00	0.00
RH105	35.5-H	6.67+03	6.67+01	7.23-01	6.15-05	0.00
RU106	369.-D	2.55+03	2.55+01	2.50+01	2.41+01	2.28+01
RU107	4.2-M	1.19+03	1.19+01	0.00	0.00	0.00
RH107	21.7-M	1.19+03	1.19+01	0.00	0.00	0.00
RU108	4.5-M	5.61+02	5.61+00	0.00	0.00	0.00
RH109	1.5-M	2.92+02	2.92+00	0.00	0.00	0.00
PD109M	4.69-M	1.46+02	1.46+00	0.00	0.00	0.00
PD109	13.46H	2.93+02	2.93+00	1.27-05	0.00	0.00
AG110M	252.-D	4.04+01	4.04-01	3.93-01	3.72-01	3.42-01
RH111	63.-S	1.64+02	1.64+00	0.00	0.00	0.00
PD111	22.-M	1.69+02	1.69+00	0.00	0.00	0.00
AG111M	74.-S	1.69+02	1.69+00	0.00	0.00	0.00
AG111	7.47-D	1.70+02	1.70+00	6.72-01	1.05-01	6.49-03
PD112	20.1-H	1.36+02	1.36+00	3.47-04	0.00	0.00
AG112	3.13-H	1.36+02	1.36+00	4.11-04	0.00	0.00
PD113	1.5-M	1.38+02	1.38+00	0.00	0.00	0.00
AG113	5.3-H	1.25+02	1.25+00	0.00	0.00	0.00
SN119M	245.-D	1.31+00	1.31-02	1.27-02	1.20-02	1.10-02
SN123	129.-D	2.40+01	2.40-01	2.28-01	2.04-01	1.74-01
SN125	9.65-D	1.04+02	1.04+00	5.03-01	1.21-01	1.40-02
SB125	2.73-Y	9.95+01	9.95-01	9.94-01	9.84-01	9.64-01
TE125M	58.-D	2.62+01	2.62-01	2.55-01	2.44-01	2.29-01
SB126M	19.0-M	4.72+02	4.72+00	0.00	0.00	0.00
SN127M	4.4-M	1.54+02	1.54+00	0.00	0.00	0.00
SN127	2.12-H	8.64+02	8.64+00	0.00	0.00	0.00
SB127	3.8-D	1.07+03	1.07+01	1.76+00	4.53-02	1.92-04
TE127M	109.-D	1.69+02	1.69+00	1.65+00	1.46+00	1.21+00
TE127	9.4-H	1.06+03	1.06+01	3.22+00	1.51+00	1.21+00
SN128	59.-M	2.83+03	2.83+01	0.00	0.00	0.00

TABLE G-1 (Continued)

1.00 MWT CORE
LEVEL A FUEL ACTIVITY (CURIES)

NUCLIDE	HALFLIFE	CORE EQUILIBRIUM	AVERAGE POWER ELEMENT AFTER 2.000 YEARS OPERATION INITIAL	10 DAY DECAY	30 DAY DECAY	60 DAY DECAY
SB128M	10.4-M	2.88+03	2.88+01	0.00	0.00	0.00
SB128	9.0-H	9.94+01	9.94-01	9.36-09	0.00	0.00
SN129M	2.5-M	3.55+03	3.55+01	0.00	0.00	0.00
SN129	7.5-M	1.95+03	1.95+01	0.00	0.00	0.00
SB129	4.34-H	6.28+03	6.28+01	0.00	0.00	0.00
TE129M	33.4-D	1.07+03	1.07+01	8.77+00	5.79+00	3.11+00
TE129	70.-M	5.93+03	5.93+01	5.27+00	3.49+00	1.87+00
SN130	3.7-M	9.75+03	9.75+01	0.00	0.00	0.00
SB130M	6.6-M	1.17+04	1.17+02	0.00	0.00	0.00
SB130	37.-M	3.01+03	3.01+01	0.00	0.00	0.00
SN131	63.-S	7.50+03	7.50+01	0.00	0.00	0.00
SB131	23.-M	2.19+04	2.19+02	0.00	0.00	0.00
TE131M	30.-M	3.28+03	3.28+01	1.29-01	1.97-06	0.00
TE131	25.-M	2.18+04	2.18+02	2.62-02	4.00-07	0.00
I 131	8.041D	2.45+04	2.45+02	1.06+02	1.89+01	1.42+00
XE131M	11.99D	3.43+02	3.43+00	1.93+00	6.06-01	1.07-01
SN132	40.0-S	4.90+03	4.90+01	0.00	0.00	0.00
SB132M	4.1-M	9.89+03	9.89+01	0.00	0.00	0.00
SB132	2.1-M	1.38+04	1.38+02	0.00	0.00	0.00
TE132	73.-H	3.64+04	3.64+02	4.32+01	6.07-01	1.01-03
I 132	2.285H	3.65+04	3.65+02	4.46+01	6.25-01	1.04-03
SB133	2.4-M	2.02+04	2.02+02	0.00	0.00	0.00
TE133M	55.4-M	3.27+04	3.27+02	0.00	0.00	0.00
TE133	12.5-M	2.70+04	2.70+02	0.00	0.00	0.00
I 133	20.8-H	5.70+04	5.70+02	1.97-01	0.00	0.00
XE133M	2.23-D	1.61+03	1.61+01	7.20-01	1.44-03	1.28-07
XE133	5.29-D	5.70+04	5.70+02	1.86+02	1.38+01	2.66-01
TE134	42.-M	5.85+04	5.85+02	0.00	0.00	0.00
I 134M	3.6-M	2.97+03	2.97+01	0.00	0.00	0.00
I 134	52.6-M	6.55+04	6.55+02	0.00	0.00	0.00

TABLE G-1 (Continued)

1.00 MWT CORE
LEVEL A FUEL ACTIVITY (CURIES)

NUCLIDE	HALFLIFE	CORE EQUILIBRIUM	AVERAGE POWER ELEMENT AFTER 2.000 YEARS OPERATION INITIAL	10 DAY DECAY	30 DAY DECAY	60 DAY DECAY
CS134	2.06-Y	3.08+03	3.08+01	3.05+01	2.99+01	2.91+01
I 135	6.585H	5.35+04	5.35+02	0.00	0.00	0.00
XE135M	15.3-M	9.33+03	9.33+01	0.00	0.00	0.00
XE135	9.17-H	5.56+04	5.56+02	2.36-05	0.00	0.00
I 136	85.-S	2.72+04	2.72+02	0.00	0.00	0.00
CS136	13.0-D	5.52+02	5.52+00	3.24+00	1.11+00	2.25-01
XE137	3.84-M	5.15+04	5.15+02	0.00	0.00	0.00
CS137	30.1-Y	2.38+03	2.38+01	2.38+01	2.38+01	2.37+01
BA137M	2.55-M	4.58+03	4.58+01	2.14+01	2.14+01	2.14+01
XE138	14.2-M	5.46+04	5.46+02	0.00	0.00	0.00
CS138M	2.9-M	1.36+03	1.36+01	0.00	0.00	0.00
CS138	32.2-M	5.66+04	5.66+02	0.00	0.00	0.00
XE139	39.7-S	4.39+04	4.39+02	0.00	0.00	0.00
CS139	9.3-M	5.36+04	5.36+02	0.00	0.00	0.00
BA139	33.3M	5.42+04	5.42+02	0.00	0.00	0.00
XE140	13.6-S	3.18+04	3.18+02	0.00	0.00	0.00
CS140	63.8-S	4.86+04	4.86+02	0.00	0.00	0.00
BA140	12.79D	5.33+04	5.33+02	3.10+02	1.05+02	2.06+01
LA140	40.23H	5.34+04	5.34+02	3.56+02	1.21+02	2.37+01
BA141	18.3M	4.91+04	4.91+02	0.00	0.00	0.00
LA141	3.87-H	4.93+04	4.93+02	0.00	0.00	0.00
CE141	32.53D	4.93+04	4.93+02	4.00+02	2.61+02	1.38+02
BA142	10.7-M	4.91+04	4.91+02	0.00	0.00	0.00
LA142	92.4-M	5.00+04	5.00+02	0.00	0.00	0.00
LA143	14.-M	5.02+04	5.02+02	0.00	0.00	0.00
CE143	33.0-H	5.05+04	5.05+02	3.29+00	1.37-04	0.00
PR143	13.58D	5.05+04	5.05+02	3.37+02	1.21+02	2.63+01
CE144	284.4D	3.87+04	3.87+02	3.73+02	3.60+02	3.34+02
PR144	17.28M	3.87+04	3.87+02	3.78+02	3.60+02	3.34+02
CE145	3.3-M	3.33+04	3.33+02	0.00	0.00	0.00

TABLE G-1 (Continued)

1.00 MWT CORE
LEVEL A FUEL ACTIVITY (CURIES)

NUCLIDE	HALFLIFE	CORE EQUILIBRIUM	AVERAGE POWER ELEMENT AFTER 2.000 YEARS OPERATION INITIAL	10 DAY DECAY	30 DAY DECAY	60 DAY DECAY
PR145	5.93-H	3.33+04	3.33+02	0.00	0.00	0.00
CE146	14.2-M	2.52+04	2.52+02	0.00	0.00	0.00
PR146	24.2-M	2.53+04	2.53+02	0.00	0.00	0.00
CE147	70.-S	1.35+04	1.35+02	0.00	0.00	0.00
PR147	12.-M	1.92+04	1.92+02	0.00	0.00	0.00
ND147	10.99D	1.92+04	1.92+02	1.02+02	2.89+01	4.36+00
PM147	2.623Y	7.87+03	7.87+01	7.91+01	7.88+01	7.74+01
PR148	2.0-M	1.42+04	1.42+02	0.00	0.00	0.00
PM148M	41.3-D	8.36+02	8.36+00	7.07+00	5.05+00	3.05+00
PM148	5.37-D	5.17+03	5.17+01	1.42+01	1.07+00	2.24-02
PR149	2.3-M	8.35+03	8.35+01	0.00	0.00	0.00
ND149	1.73-H	9.07+03	9.07+01	0.00	0.00	0.00
PM149	53.1-H	9.07+03	9.07+01	4.09+00	7.77-03	6.43-07
ND151	12.4-M	3.54+03	3.54+01	0.00	0.00	0.00
PM151	28.4-H	3.56+03	3.56+01	1.02-01	8.36-07	0.00
SM151	93.-Y	5.27+01	5.27-01	5.26-01	5.27-01	5.27-01
ND152	11.5-M	2.20+03	2.20+01	0.00	0.00	0.00
PM152	4.1-M	2.24+03	2.24+01	0.00	0.00	0.00
EU152	13.-Y	2.06-03	2.06-05	2.06-05	2.05-05	2.04-05
ND153	67.5-S	1.20+03	1.20+01	0.00	0.00	0.00
PM153	5.4-M	1.37+03	1.37+01	0.00	0.00	0.00
SM153	45.5-H	1.37+03	1.37+01	3.34-01	3.00-04	0.00
ND154	7.73-D	4.52+02	4.52+00	1.84+00	3.07-01	2.08-02
PM154	2.8-M	5.39+02	5.39+00	1.64+00	3.07-01	2.08-02
EU154	8.6-Y	1.08+02	1.08+00	1.08+00	1.06+00	1.07+00
SM155	22.2-M	2.72+02	2.72+00	0.00	0.00	0.00
EU155	4.8-Y	3.50+01	3.50-01	3.49-01	3.46-01	3.42-01
SM156	9.4-H	1.12+02	1.12+00	2.31-08	0.00	0.00
EU156	15.2-D	1.13+02	1.13+00	7.32-01	2.94-01	7.49-02
SM157	83.-S	5.14+01	5.14-01	0.00	0.00	0.00

TABLE G-1 (Continued)

1.00 MWT CORE
LEVEL A FUEL ACTIVITY (CURIES)

NUCLIDE	HALFLIFE	CORE EQUILIBRIUM	AVERAGE POWER ELEMENT AFTER 2.000 YEARS OPERATION INITIAL	10 DAY DECAY	30 DAY DECAY	60 DAY DECAY
EU157	15.2-H	5.23+01	5.23-01	9.23-06	0.00	0.00
	TOTALS	3.60+06	3.60+04	5.31+03	3.50+03	2.46+03

* - STABLE NUCLIDES ARE GIVEN IN GRAMS

EXPONENTIAL NOTATION IS EMPLOYED (1.23+01 REPRESENTS 12.3)

TABLE G-2
TRIGA SPENT FUEL ACTIVITY - 150 DAYS THROUGH 3 YEARS
(Average Power Element)

1.00 MWT CORE
LEVEL A FUEL ACTIVITY (CURIES)

NUCLIDE	HALFLIFE	CORE EQUILIBRIUM	AVERAGE POWER ELEMENT AFTER 2.000 YEARS OPERATION INITIAL	150 DAY DECAY	365 DAY DECAY	1095 DAY DECAY
H3	12.3-Y	9.03+00	9.06-02	8.87-02	8.58-02	7.67-02
C14	5730-Y	0.00	0.00	0.00	0.00	0.00
GE79	43.0-S	3.62+02	3.62+00	0.00	0.00	0.00
AS79	9.0-M	3.35+02	3.35+00	0.00	0.00	0.00
SE79M	3.39-M	3.35+02	3.35+00	0.00	0.00	0.00
SE81	13.5-M	1.66+03	1.66+01	0.00	0.00	0.00
SE83M	70.-S	2.17+03	2.17+01	0.00	0.00	0.00
SE83	22.5-M	2.22+03	2.22+01	0.00	0.00	0.00
BR83	2.4-H	4.56+03	4.56+01	0.00	0.00	0.00
KR83M	1.86-H	4.56+03	4.56+01	0.00	0.00	0.00
SE84	3.3-M	8.04+03	8.04+01	0.00	0.00	0.00
BR84	31.8-M	8.25+03	8.25+01	0.00	0.00	0.00
BR85	2.87-M	1.11+04	1.11+02	0.00	0.00	0.00
KR85M	4.48-H	1.11+04	1.11+02	0.00	0.00	0.00
KR85	10.73Y	2.96+02	2.96+00	2.83+00	2.78+00	2.44+00
KR87	76.-M	2.14+04	2.14+02	0.00	0.00	0.00
KR88	2.8-H	3.02+04	3.02+02	0.00	0.00	0.00
RB88	17.7-M	3.09+04	3.09+02	0.00	0.00	0.00
KR89	3.16-M	3.91+04	3.91+02	0.00	0.00	0.00
RB89	15.2-M	4.12+04	4.12+02	0.00	0.00	0.00
SR89	50.5-D	4.15+04	4.15+02	5.29+01	2.76+00	1.23-04
KR90	32.3-S	4.29+04	4.29+02	0.00	0.00	0.00
RB90M	4.28-M	1.06+04	1.06+02	0.00	0.00	0.00
RB90	2.7-M	3.99+04	3.99+02	0.00	0.00	0.00
SR90	29.-Y	2.35+03	2.35+01	2.33+01	2.29+01	2.19+01
Y90	64.-H	2.35+03	2.35+01	2.33+01	2.29+01	2.19+01
KR91	9.0-S	2.90+04	2.90+02	0.00	0.00	0.00
RB91	58.5-S	4.82+04	4.82+02	0.00	0.00	0.00
SR91	9.48-H	5.04+04	5.04+02	0.00	0.00	0.00
Y91	53.6-D	5.04+04	5.04+02	8.61+01	6.77+00	1.20-03

TABLE G-2 (Continued)

1.0C MWT CORE
LEVEL A FUEL ACTIVITY (CURIES)

NUCLIDE	HALFLIFE	CORE EQUILIBRIUM	AVERAGE POWER ELEMENT AFTER 2.000 YEARS OPERATION INITIAL	150 DAY DECAY	365 DAY DECAY	1095 DAY DECAY
SR92	2.71-H	5.03+04	5.03+02	0.00	0.00	0.00
Y92	3.53-H	5.07+04	5.07+02	0.00	0.00	0.00
SR93	7.5-M	5.31+04	5.31+02	0.00	0.00	0.00
Y93	10.2-H	5.43+04	5.43+02	0.00	0.00	0.00
SR94	1.29-M	5.12+04	5.12+02	0.00	0.00	0.00
Y94	19.0-M	5.45+04	5.45+02	0.00	0.00	0.00
Y95	10.5-M	5.46+04	5.46+02	0.00	0.00	0.00
ZR95	65.5-D	5.52+04	5.52+02	1.13+02	1.16+01	5.11-03
NB95M	3.61-D	5.52+02	5.52+00	0.00	0.00	0.00
NB95	35.1-D	5.52+04	5.52+02	2.10+02	2.45+01	1.10-02
Y96	6.0-S	5.11+04	5.11+02	0.00	0.00	0.00
ZR97	16.8-H	5.04+04	5.04+02	0.00	0.00	0.00
NB97	73.6-M	5.05+04	5.05+02	0.00	0.00	0.00
NB98	51.0-M	1.79+02	1.79+00	0.00	0.00	0.00
NB99M	2.5-M	1.76+04	1.76+02	0.00	0.00	0.00
NB99	14.0-S	3.38+04	3.38+02	0.00	0.00	0.00
MO99	66.02H	5.20+04	5.20+02	0.00	0.00	0.00
TC99M	6.02-H	4.58+04	4.58+02	0.00	0.00	0.00
NB100M	7.0-S	2.61+04	2.61+02	0.00	0.00	0.00
NB100	2.9-M	2.61+04	2.61+02	0.00	0.00	0.00
MO101	14.6-M	4.31+04	4.31+02	0.00	0.00	0.00
TC101	14.2-M	4.31+04	4.31+02	0.00	0.00	0.00
MO102	11.1-M	3.60+04	3.60+02	0.00	0.00	0.00
TC102M	4.3-M	3.60+04	3.60+02	0.00	0.00	0.00
MO103	60.-S	2.52+04	2.52+02	0.00	0.00	0.00
RU103	39.6-D	2.59+04	2.59+02	1.87+01	4.34-01	1.23-06
RH103M	56.-M	2.56+04	2.56+02	1.87+01	4.35-01	1.23-06
MO104	1.6-M	1.51+04	1.51+02	0.00	0.00	0.00
TC104	18.-M	1.56+04	1.56+02	0.00	0.00	0.00
TC105	8.0-M	8.20+03	8.20+01	0.00	0.00	0.00

TABLE G-2 (Continued)

1.00 MWT CORE
LEVEL A FUEL ACTIVITY (CURIES)

NUCLIDE	HALFLIFE	CORE EQUILIBRIUM	AVERAGE POWER ELEMENT AFTER 2.000 YEARS OPERATION INITIAL	150 DAY DECAY	365 DAY DECAY	1095 DAY DECAY
RU105	4.44-H	8.22+03	8.22+01	0.00	0.00	0.00
RH105	35.5-H	6.67+03	6.67+01	0.00	0.00	0.00
RU106	369.-D	2.55+03	2.55+01	1.92+01	1.28+01	3.26+00
RU107	4.2-M	1.19+03	1.19+01	0.00	0.00	0.00
RH107	21.7-M	1.19+03	1.19+01	0.00	0.00	0.00
RU108	4.5-M	5.61+02	5.61+00	0.00	0.00	0.00
RH109	1.5-M	2.92+02	2.92+00	0.00	0.00	0.00
PD109M	4.69-M	1.46+02	1.46+00	0.00	0.00	0.00
PD109	13.46H	2.93+02	2.93+00	0.00	0.00	0.00
AG110M	252.-D	4.04+01	4.04-01	2.67-01	1.48-01	1.99-02
RH111	63.-S	1.64+02	1.64+00	0.00	0.00	0.00
PD111	22.-M	1.69+02	1.69+00	0.00	0.00	0.00
AG111M	74.-S	1.69+02	1.69+00	0.00	0.00	0.00
AG111	7.47-D	1.70+02	1.70+00	1.53-05	0.00	0.00
PD112	20.1-H	1.36+02	1.36+00	0.00	0.00	0.00
AG112	3.13-H	1.36+02	1.36+00	0.00	0.00	0.00
PD113	1.5-M	1.38+02	1.38+00	0.00	0.00	0.00
AG113	5.3-H	1.25+02	1.25+00	0.00	0.00	0.00
SN119M	245.-D	1.31+00	1.31-02	8.55-03	4.65-03	5.90-04
SN123	129.-D	2.40+01	2.40-01	1.07-01	3.38-02	6.69-04
SN125	9.65-D	1.04+02	1.04+00	2.13-05	0.00	0.00
SB125	2.73-Y	9.95+01	9.95-01	9.06-01	7.80-01	4.69-01
TE125M	58.-D	2.62+01	2.62-01	2.01-01	1.06-01	9.97-02
SB126M	19.0-M	4.72+02	4.72+00	0.00	0.00	0.00
SN127M	4.4-M	1.54+02	1.54+00	0.00	0.00	0.00
SN127	2.12-H	8.64+02	8.64+00	0.00	0.00	0.00
SB127	3.8-D	1.07+03	1.07+01	0.00	0.00	0.00
TE127M	109.-D	1.69+02	1.69+00	6.82-01	1.74-01	1.67-03
TE127	9.4-H	1.06+03	1.06+01	6.84-01	1.74-01	1.68-03
SN128	59.-M	2.33+03	2.33+01	0.00	0.00	0.00

TABLE G-2 (Continued)

1.00 MWT CORE
LEVEL A FUEL ACTIVITY (CURIES)

NUCLIDE	HALFLIFE	CORE EQUILIBRIUM	AVERAGE POWER ELEMENT AFTER 2.000 YEARS OPERATION INITIAL	150 DAY DECAY	365 DAY DECAY	1095 DAY DECAY
SB128M	10.4-M	2.38+03	2.68+01	0.00	0.00	0.00
SB128	9.0-H	9.94+01	9.94-01	0.00	0.00	0.00
SN129M	2.5-M	3.55+03	3.55+01	0.00	0.00	0.00
SN129	7.5-M	1.95+03	1.95+01	0.00	0.00	0.00
SB129	4.34-H	6.28+03	6.28+01	0.00	0.00	0.00
TE129M	33.4-D	1.07+03	1.07+01	4.80-01	5.54-03	0.00
TE129	70.-M	5.93+03	5.93+01	2.83-01	3.33-03	0.00
SN130	3.7-M	9.75+03	9.75+01	0.00	0.00	0.00
SB130M	6.5-M	1.17+04	1.17+02	0.00	0.00	0.00
SB130	37.-M	3.01+03	3.01+01	0.00	0.00	0.00
SN131	63.-S	7.50+03	7.50+01	0.00	0.00	0.00
SB131	23.-M	2.19+04	2.19+02	0.00	0.00	0.00
TE131M	30.-H	3.28+03	3.28+01	0.00	0.00	0.00
TE131	25.-M	2.18+04	2.18+02	0.00	0.00	0.00
I 131	8.041D	2.45+04	2.45+02	6.07-04	0.00	0.00
XE131M	11.99D	3.43+02	3.43+00	5.38-04	0.00	0.00
SN132	40.0-S	4.90+03	4.90+01	0.00	0.00	0.00
SB132M	4.1-M	9.89+03	9.89+01	0.00	0.00	0.00
SB132	2.1-M	1.38+04	1.38+02	0.00	0.00	0.00
TE132	78.-H	3.64+04	3.64+02	0.00	0.00	0.00
I 132	2.285H	3.65+04	3.65+02	0.00	0.00	0.00
SB133	2.4-M	2.02+04	2.02+02	0.00	0.00	0.00
TE133M	55.4-M	3.27+04	3.27+02	0.00	0.00	0.00
TE133	12.5-M	2.70+04	2.70+02	0.00	0.00	0.00
I 133	20.8-H	5.70+04	5.70+02	0.00	0.00	0.00
XE133M	2.23-D	1.61+03	1.61+01	0.00	0.00	0.00
XE133	5.29-D	5.70+04	5.70+02	2.01-06	0.00	0.00
TE134	42.-M	5.85+04	5.85+02	0.00	0.00	0.00
I 134M	3.6-M	2.97+03	2.97+01	0.00	0.00	0.00
I 134	52.6-M	6.55+04	6.55+02	0.00	0.00	0.00

TABLE G-2 (Continued)

1.00 MWT CORE
LEVEL A FUEL ACTIVITY (CURIES)

NUCLIDE	HALFLIFE	CORE EQUILIBRIUM	AVERAGE POWER ELEMENT AFTER 2.000 YEARS OPERATION INITIAL	150 DAY DECAY	365 DAY DECAY	1095 DAY DECAY
CS134	2.06-Y	3.08+03	3.08+01	2.68+01	2.20+01	1.12+01
I 135	6.585H	5.35+04	5.35+02	0.00	0.00	0.00
XE135M	15.3-M	9.33+03	9.33+01	0.00	0.00	0.00
XE135	9.17-H	5.56+04	5.56+02	0.00	0.00	0.00
I 136	85.-S	2.72+04	2.72+02	0.00	0.00	0.00
CS136	13.0-D	5.52+02	5.52+00	1.86-03	1.95-08	0.00
XE137	3.84-M	5.15+04	5.15+02	0.00	0.00	0.00
CS137	30.1-Y	2.38+03	2.38+01	2.36+01	2.33+01	2.22+01
BA137M	2.55-M	4.53+03	4.53+01	2.12+01	2.10+01	2.00+01
XE138	14.2-M	5.46+04	5.46+02	0.00	0.00	0.00
CS138M	2.9-M	1.36+03	1.36+01	0.00	0.00	0.00
CS138	32.2-M	5.66+04	5.66+02	0.00	0.00	0.00
XE139	39.7-S	4.39+04	4.39+02	0.00	0.00	0.00
CS139	9.3-M	5.36+04	5.36+02	0.00	0.00	0.00
BA139	83.3M	5.42+04	5.42+02	0.00	0.00	0.00
XE140	13.6-S	3.18+04	3.18+02	0.00	0.00	0.00
CS140	63.8-S	4.86+04	4.86+02	0.00	0.00	0.00
BA140	12.79D	5.33+04	5.33+02	1.57-01	1.37-06	0.00
LA140	40.23H	5.34+04	5.34+02	1.31-01	1.57-06	0.00
BA141	18.3M	4.91+04	4.91+02	0.00	0.00	0.00
LA141	3.87-H	4.93+04	4.93+02	0.00	0.00	0.00
CE141	32.53D	4.93+04	4.93+02	2.03+01	2.08-01	0.00
BA142	10.7-M	4.91+04	4.91+02	0.00	0.00	0.00
LA142	92.4-M	5.00+04	5.00+02	0.00	0.00	0.00
LA143	14.-M	5.02+04	5.02+02	0.00	0.00	0.00
CE143	33.0-H	5.05+04	5.05+02	0.00	0.00	0.00
PR143	13.58D	5.05+04	5.05+02	2.66-01	4.55-06	0.00
CE144	284.4D	3.87+04	3.87+02	2.68+02	1.59+02	2.68+01
PR144	17.25M	3.37+04	3.37+02	2.68+02	1.59+02	2.68+01
CE145	3.3-M	3.33+04	3.33+02	0.00	0.00	0.00

TABLE G-2 (Continued)

1.00 MWT CORE
LEVEL A FUEL ACTIVITY (CURIES)

NUCLIDE	HALFLIFE	CORE EQUILIBRIUM	AVERAGE POWER ELEMENT AFTER 2.000 YEARS OPERATION INITIAL	150 DAY DECAY	365 DAY DECAY	1095 DAY DECAY
PR145	5.98-H	3.33+04	3.33+02	0.00	0.00	0.00
CE146	14.2-M	2.52+04	2.52+02	0.00	0.00	0.00
PR146	24.2-M	2.53+04	2.53+02	0.00	0.00	0.00
CE147	70.-S	1.85+04	1.85+02	0.00	0.00	0.00
PR147	12.-M	1.92+04	1.92+02	0.00	0.00	0.00
ND147	10.99D	1.92+04	1.92+02	1.49-02	0.00	0.00
PM147	2.623Y	7.87+03	7.87+01	7.26+01	6.21+01	3.66+01
PR148	2.0-M	1.42+04	1.42+02	0.00	0.00	0.00
PM148M	41.3-D	8.36+02	8.36+00	6.74-01	1.82-02	8.69-08
PM148	5.37-D	5.17+03	5.17+01	2.01-07	0.00	0.00
PR149	2.3-M	8.85+03	8.85+01	0.00	0.00	0.00
ND149	1.73-H	9.07+03	9.07+01	0.00	0.00	0.00
PM149	53.1-H	9.07+03	9.07+01	0.00	0.00	0.00
ND151	12.4-M	3.54+03	3.54+01	0.00	0.00	0.00
PM151	28.4-H	3.56+03	3.56+01	0.00	0.00	0.00
SM151	93.-Y	5.27+01	5.27-01	5.26-01	5.24-01	5.16-01
ND152	11.5-M	2.20+03	2.20+01	0.00	0.00	0.00
PM152	4.1-M	2.24+03	2.24+01	0.00	0.00	0.00
EU152	13.-Y	2.06-03	2.06-05	2.02-05	1.95-05	1.76-05
ND153	67.5-S	1.20+03	1.20+01	0.00	0.00	0.00
PM153	5.4-M	1.37+03	1.37+01	0.00	0.00	0.00
SM153	45.5-H	1.37+03	1.37+01	0.00	0.00	0.00
ND154	7.73-D	4.52+02	4.52+00	6.50-06	0.00	0.00
PM154	2.8-M	5.39+02	5.39+00	6.50-06	0.00	0.00
EU154	8.6-Y	1.03+02	1.08+00	1.05+00	1.00+00	8.51-01
SM155	22.2-M	2.72+02	2.72+00	0.00	0.00	0.00
EU155	4.8-Y	3.50+01	3.50-01	3.30-01	3.03-01	2.27-01
SM156	9.4-H	1.12+02	1.12+00	0.00	0.00	0.00
EU156	15.2-D	1.13+02	1.13+00	1.24-03	6.82-08	0.00
SM157	83.-S	5.14+01	5.14-01	0.00	0.00	0.00

TABLE G-2 (Continued)

1.00 MWT CORE
LEVEL A FUEL ACTIVITY (CURIES)

NUCLIDE	HALFLIFE	CORE EQUILIBRIUM	AVERAGE POWER ELEMENT AFTER 2.000 YEARS OPERATION INITIAL	150 DAY DECAY	365 DAY DECAY	1095 DAY DECAY
EU157	15.2-H	5.23+01	5.23-01	0.00	0.00	0.00
	TOTALS	3.60+06	3.60+04	1.28+03	5.58+02	1.95+02

* - STABLE NUCLIDES ARE GIVEN IN GRAMS

EXPONENTIAL NOTATION IS EMPLOYED (1.23+01 REPRESENTS 12.3)

TABLE G-3
TRIGA SPENT FUEL ACTIVITY - 6 THROUGH 30 YEARS
(Average Power Element)
1.00 MWT CORE
LEVEL A FUEL ACTIVITY (CURIES)

NUCLIDE	HALFLIFE	CORE EQUILIBRIUM	AVERAGE POWER ELEMENT AFTER 2.000 YEARS OPERATION INITIAL	2190 DAY DECAY	3650 DAY DECAY	10950 DAY DECAY
H3	12.3-Y	9.08+00	9.08-02	6.47-02	5.16-02	1.67-02
C14	5730-Y	0.00	0.00	0.00	0.00	0.00
GE79	43.0-S	3.62+02	3.62+00	0.00	0.00	0.00
AS79	9.0-M	3.85+02	3.85+00	0.00	0.00	0.00
SE79M	3.89-M	3.85+02	3.85+00	0.00	0.00	0.00
SE81	18.5-M	1.66+03	1.66+01	0.00	0.00	0.00
SE83M	70.-S	2.17+03	2.17+01	0.00	0.00	0.00
SE83	22.5-M	2.22+03	2.22+01	0.00	0.00	0.00
BR83	2.4-H	4.56+03	4.56+01	0.00	0.00	0.00
KR83M	1.86-H	4.56+03	4.56+01	0.00	0.00	0.00
SE84	3.3-M	8.04+03	8.04+01	0.00	0.00	0.00
BR84	31.8-M	8.25+03	8.25+01	0.00	0.00	0.00
BR85	2.87-M	1.11+04	1.11+02	0.00	0.00	0.00
KR85M	4.48-H	1.11+04	1.11+02	0.00	0.00	0.00
KR85	10.73Y	2.96+02	2.96+00	2.01+00	1.55+00	4.27-01
KR87	76.-M	2.14+04	2.14+02	0.00	0.00	0.00
KR88	2.8-H	3.02+04	3.02+02	0.00	0.00	0.00
RB88	17.7-M	3.09+04	3.09+02	0.00	0.00	0.00
KR89	3.16-M	3.91+04	3.91+02	0.00	0.00	0.00
RB89	15.2-M	4.12+04	4.12+02	0.00	0.00	0.00
SR89	50.5-D	4.15+04	4.15+02	0.00	0.00	0.00
KR90	32.3-S	4.29+04	4.29+02	0.00	0.00	0.00
RB90M	4.28-M	1.06+04	1.06+02	0.00	0.00	0.00
RB90	2.7-M	3.99+04	3.99+02	0.00	0.00	0.00
SR90	29.-Y	2.35+03	2.35+01	2.03+01	1.85+01	1.15+01
Y90	64.-H	2.35+03	2.35+01	2.03+01	1.85+01	1.15+01
KR91	9.0-S	2.90+04	2.90+02	0.00	0.00	0.00
RB91	58.5-S	4.82+04	4.82+02	0.00	0.00	0.00
SR91	9.48-H	5.04+04	5.04+02	0.00	0.00	0.00
Y91	58.6-D	5.04+04	5.04+02	0.00	0.00	0.00

TABLE G-3 (Continued)

1.00 MWT CORE
LEVEL A FUEL ACTIVITY (CURIES)

NUCLIDE	HALFLIFE	CORE EQUILIBRIUM	AVERAGE POWER ELEMENT AFTER 2.000 YEARS OPERATION INITIAL	2190 DAY DECAY	3650 DAY DECAY	10950 DAY DECAY
SR92	2.71-H	5.03+04	5.03+02	0.00	0.00	0.00
Y92	3.53-H	5.07+04	5.07+02	0.00	0.00	0.00
SR93	7.5-M	5.31+04	5.31+02	0.00	0.00	0.00
Y93	10.2-H	5.43+04	5.43+02	0.00	0.00	0.00
SR94	1.29-M	5.12+04	5.12+02	0.00	0.00	0.00
Y94	19.0-M	5.45+04	5.45+02	0.00	0.00	0.00
Y95	10.5-M	5.46+04	5.46+02	0.00	0.00	0.00
ZR95	65.5-D	5.52+04	5.52+02	0.00	0.00	0.00
NB95M	3.61-D	5.52+02	5.52+00	0.00	0.00	0.00
NB95	35.1-D	5.52+04	5.52+02	0.00	0.00	0.00
Y96	6.0-S	5.11+04	5.11+02	0.00	0.00	0.00
ZR97	16.8-H	5.04+04	5.04+02	0.00	0.00	0.00
NB97	73.6-M	5.05+04	5.05+02	0.00	0.00	0.00
NB98	51.0-M	1.79+02	1.79+00	0.00	0.00	0.00
NB99M	2.5-M	1.76+04	1.76+02	0.00	0.00	0.00
NB99	14.0-S	3.38+04	3.38+02	0.00	0.00	0.00
MO99	66.02H	5.20+04	5.20+02	0.00	0.00	0.00
TC99M	6.02-H	4.58+04	4.58+02	0.00	0.00	0.00
NB100M	7.0-S	2.61+04	2.61+02	0.00	0.00	0.00
NB100	2.9-M	2.61+04	2.61+02	0.00	0.00	0.00
MO101	14.6-M	4.31+04	4.31+02	0.00	0.00	0.00
TC101	14.2-M	4.31+04	4.31+02	0.00	0.00	0.00
MO102	11.1-M	3.60+04	3.60+02	0.00	0.00	0.00
TC102M	4.3-M	3.60+04	3.60+02	0.00	0.00	0.00
MO103	60.-S	2.52+04	2.52+02	0.00	0.00	0.00
RU103	39.6-D	2.59+04	2.59+02	0.00	0.00	0.00
RH103M	56.-M	2.56+04	2.56+02	0.00	0.00	0.00
MO104	1.6-M	1.51+04	1.51+02	0.00	0.00	0.00
TC104	18.-M	1.56+04	1.56+02	0.00	0.00	0.00
TC105	3.0-M	8.20+03	8.20+01	0.00	0.00	0.00

TABLE G-3 (Continued)

1.00 MWT CORE
LEVEL A FUEL ACTIVITY (CURIES)

NUCLIDE	HALFLIFE	CORE EQUILIBRIUM	AVERAGE POWER ELEMENT AFTER 2.000 YEARS OPERATION INITIAL	2190 DAY DECAY	3650 DAY DECAY	10950 DAY DECAY
RU105	4.44-H	8.22+03	8.22+01	0.00	0.00	0.00
RH105	35.5-h	6.67+03	6.67+01	0.00	0.00	0.00
RU106	369.-D	2.55+03	2.55+01	4.17-01	2.68-02	0.00
RU107	4.2-M	1.19+03	1.19+01	0.00	0.00	0.00
RH107	21.7-M	1.19+03	1.19+01	0.00	0.00	0.00
RU108	4.5-M	5.61+02	5.61+00	0.00	0.00	0.00
RH109	1.5-M	2.92+02	2.92+00	0.00	0.00	0.00
PD109M	4.69-M	1.46+02	1.46+00	0.00	0.00	0.00
PD109	13.46H	2.93+02	2.93+00	0.00	0.00	0.00
AG110M	252.-D	4.04+01	4.04-01	9.76-04	1.76-05	0.00
RH111	63.-S	1.64+02	1.64+00	0.00	0.00	0.00
PD111	22.-M	1.69+02	1.69+00	0.00	0.00	0.00
AG111M	74.-S	1.69+02	1.69+00	0.00	0.00	0.00
AG111	7.47-D	1.70+02	1.70+00	0.00	0.00	0.00
PD112	20.1-H	1.36+02	1.36+00	0.00	0.00	0.00
AG112	3.13-H	1.36+02	1.36+00	0.00	0.00	0.00
PD113	1.5-M	1.33+02	1.33+00	0.00	0.00	0.00
AG113	5.3-H	1.25+02	1.25+00	0.00	0.00	0.00
SN119M	245.-D	1.31+00	1.31-02	2.66-05	4.27-07	0.00
SN123	129.-D	2.40+01	2.40-01	1.86-06	7.29-10	0.00
SN125	9.65-D	1.04+02	1.04+00	0.00	0.00	0.00
SB125	2.73-Y	9.95+01	9.95-01	2.19-01	7.94-02	4.95-04
TE125M	58.-D	2.62+01	2.62-01	4.65-02	1.69-02	1.05-04
SB126M	19.0-M	4.72+02	4.72+00	0.00	0.00	0.00
SN127M	4.4-M	1.54+02	1.54+00	0.00	0.00	0.00
SN127	2.12-H	8.64+02	8.64+00	0.00	0.00	0.00
SB127	3.8-D	1.07+03	1.07+01	0.00	0.00	0.00
TE127M	109.-D	1.69+02	1.69+00	1.58-06	0.00	0.00
TE127	9.4-H	1.06+03	1.06+01	1.59-06	0.00	0.00
SN128	59.-M	2.83+03	2.83+01	0.00	0.00	0.00

TABLE G-3 (Continued)

1.00 MWT CORE
LEVEL A FUEL ACTIVITY (CURIES)

NUCLIDE	HALFLIFE	CORE EQUILIBRIUM	AVERAGE POWER ELEMENT AFTER 2.000 YEARS OPERATION INITIAL	2190 DAY DECAY	3650 DAY DECAY	10950 DAY DECAY
SB128M	10.4-M	2.68+03	2.68+01	0.00	0.00	0.00
SB123	9.0-H	9.94+01	9.94-01	0.00	0.00	0.00
SN129M	2.5-M	3.55+03	3.55+01	0.00	0.00	0.00
SN129	7.5-M	1.95+03	1.95+01	0.00	0.00	0.00
SB129	4.34-H	6.28+03	6.28+01	0.00	0.00	0.00
TE129M	33.4-D	1.07+03	1.07+01	0.00	0.00	0.00
TE129	70.-M	5.93+03	5.93+01	0.00	0.00	0.00
SN130	3.7-M	9.75+03	9.75+01	0.00	0.00	0.00
SB130M	6.6-M	1.17+04	1.17+02	0.00	0.00	0.00
SB130	37.-M	3.01+03	3.01+01	0.00	0.00	0.00
SN131	63.-S	7.50+03	7.50+01	0.00	0.00	0.00
SB131	23.-M	2.19+04	2.19+02	0.00	0.00	0.00
TE131M	30.-M	3.28+03	3.28+01	0.00	0.00	0.00
TE131	25.-M	2.18+04	2.18+02	0.00	0.00	0.00
I 131	8.0410	2.45+04	2.45+02	0.00	0.00	0.00
XE131M	11.99D	3.43+02	3.43+00	0.00	0.00	0.00
SN132	40.0-S	4.90+03	4.90+01	0.00	0.00	0.00
SB132M	4.1-M	9.89+03	9.89+01	0.00	0.00	0.00
SB132	2.1-M	1.38+04	1.38+02	0.00	0.00	0.00
TE132	78.-H	3.64+04	3.64+02	0.00	0.00	0.00
I 132	2.285H	3.65+04	3.65+02	0.00	0.00	0.00
SB133	2.4-M	2.02+04	2.02+02	0.00	0.00	0.00
TE133M	55.4-M	3.27+04	3.27+02	0.00	0.00	0.00
TE133	12.5-M	2.70+04	2.70+02	0.00	0.00	0.00
I 133	20.8-H	5.70+04	5.70+02	0.00	0.00	0.00
XE133M	2.23-D	1.61+03	1.61+01	0.00	0.00	0.00
XE133	5.29-D	5.70+04	5.70+02	0.00	0.00	0.00
TE134	42.-M	5.85+04	5.85+02	0.00	0.00	0.00
I 134M	3.5-M	2.97+03	2.97+01	0.00	0.00	0.00
I 134	52.6-M	6.55+04	6.55+02	0.00	0.00	0.00

TABLE G-3 (Continued)

1.00 MWT CORE

LEVEL A FUEL ACTIVITY (CURIES)

NUCLIDE	HALFLIFE	CORE EQUILIBRIUM	AVERAGE POWER ELEMENT AFTER 2.000 YEARS OPERATION INITIAL	2190 DAY DECAY	3650 DAY DECAY	10950 DAY DECAY
CS134	2.06-Y	3.08+03	3.08+01	4.09+00	1.06+00	1.27-03
I 133	6.585H	5.35+04	5.35+02	0.00	0.00	0.00
XE135M	15.3-M	9.33+03	9.33+01	0.00	0.00	0.00
XE135	9.17-H	5.56+04	5.56+02	0.00	0.00	0.00
I 136	85.-S	2.72+04	2.72+02	0.00	0.00	0.00
CS136	13.0-D	5.52+02	5.52+00	0.00	0.00	0.00
XE137	3.84-M	5.15+04	5.15+02	0.00	0.00	0.00
CS137	30.1-Y	2.38+03	2.38+01	2.07+01	1.89+01	1.19+01
BA137M	2.55-M	4.58+03	4.58+01	1.97+01	1.70+01	1.07+01
XE138	14.2-M	5.46+04	5.46+02	0.00	0.00	0.00
CS138M	2.9-M	1.36+03	1.36+01	0.00	0.00	0.00
CS138	32.2-M	5.66+04	5.66+02	0.00	0.00	0.00
XE139	39.7-S	4.39+04	4.39+02	0.00	0.00	0.00
CS139	9.3-M	5.36+04	5.36+02	0.00	0.00	0.00
BA139	83.3M	5.42+04	5.42+02	0.00	0.00	0.00
XE140	13.6-S	3.13+04	3.13+02	0.00	0.00	0.00
CS140	63.8-S	4.86+04	4.86+02	0.00	0.00	0.00
BA140	12.79D	5.33+04	5.33+02	0.00	0.00	0.00
LA140	40.23H	5.34+04	5.34+02	0.00	0.00	0.00
BA141	18.3M	4.91+04	4.91+02	0.00	0.00	0.00
LA141	3.97-H	4.93+04	4.93+02	0.00	0.00	0.00
CE141	32.53D	4.93+04	4.93+02	0.00	0.00	0.00
BA142	10.7-M	4.91+04	4.91+02	0.00	0.00	0.00
LA142	92.4-M	5.00+04	5.00+02	0.00	0.00	0.00
LA143	14.-M	5.02+04	5.02+02	0.00	0.00	0.00
CE143	33.0-H	5.05+04	5.05+02	0.00	0.00	0.00
PR143	13.58D	5.05+04	5.05+02	0.00	0.00	0.00
CE144	284.4D	3.97+04	3.97+02	1.96+00	5.30-02	0.00
PR144	17.28M	3.87+04	3.87+02	1.96+00	5.30-02	0.00
CE145	3.3-M	3.33+04	3.33+02	0.00	0.00	0.00

TABLE G-3 (Continued)

1.00 MWT CORE
LEVEL A FUEL ACTIVITY (CURIES)

NUCLIDE	HALFLIFE	CORE EQUILIBRIUM	AVERAGE POWER ELEMENT AFTER 2.000 YEARS OPERATION INITIAL	2190 DAY DECAY	3650 DAY DECAY	10950 DAY DECAY
PR145	5.98-H	3.33+04	3.33+02	0.00	0.00	0.00
CE146	14.2-M	2.52+04	2.52+02	0.00	0.00	0.00
PR146	24.2-M	2.53+04	2.53+02	0.00	0.00	0.00
CE147	70.-S	1.85+04	1.85+02	0.00	0.00	0.00
PR147	12.-M	1.92+04	1.92+02	0.00	0.00	0.00
ND147	10.99D	1.92+04	1.92+02	0.00	0.00	0.00
PM147	2.623Y	7.87+03	7.87+01	1.66+01	5.76+00	2.92-02
PR148	2.0-M	1.42+04	1.42+02	0.00	0.00	0.00
PM148M	41.3-D	8.36+02	8.36+00	0.00	0.00	0.00
PM148	5.37-D	5.17+03	5.17+01	0.00	0.00	0.00
PR149	2.3-M	8.85+03	8.85+01	0.00	0.00	0.00
ND149	1.73-H	9.07+03	9.07+01	0.00	0.00	0.00
PM149	53.1-H	9.07+03	9.07+01	0.00	0.00	0.00
ND151	12.4-M	3.54+03	3.54+01	0.00	0.00	0.00
PM151	28.4-H	3.56+03	3.56+01	0.00	0.00	0.00
SM151	93.-Y	5.27+01	5.27-01	5.05-01	4.90-01	4.22-01
ND152	11.5-M	2.20+03	2.20+01	0.00	0.00	0.00
PM152	4.1-M	2.24+03	2.24+01	0.00	0.00	0.00
EU152	13.-Y	2.06-03	2.06-05	1.50-05	1.21-05	4.16-06
ND153	67.5-S	1.20+03	1.20+01	0.00	0.00	0.00
PM153	5.4-M	1.37+03	1.37+01	0.00	0.00	0.00
SM153	45.5-H	1.37+03	1.37+01	0.00	0.00	0.00
ND154	7.73-D	4.52+02	4.52+00	0.00	0.00	0.00
PM154	2.8-M	5.39+02	5.39+00	0.00	0.00	0.00
EU154	8.5-Y	1.08+02	1.08+00	6.69-01	4.84-01	9.66-02
SM155	22.2-M	2.72+02	2.72+00	0.00	0.00	0.00
EU155	4.8-Y	3.50+01	3.50-01	1.47-01	8.27-02	4.60-03
SM156	9.4-H	1.12+02	1.12+00	0.00	0.00	0.00
EU156	15.2-D	1.13+02	1.13+00	0.00	0.00	0.00
SM157	83.-S	5.14+01	5.14-01	0.00	0.00	0.00

TABLE G-3 (Continued)

1.00 MWT CORE
LEVEL A FUEL ACTIVITY (CURIES)

NUCLIDE	HALFLIFE	CORE EQUILIBRIUM	AVERAGE POWER ELEMENT AFTER 2.000 YEARS OPERATION INITIAL	2190 DAY DECAY	3650 DAY DECAY	10950 DAY DECAY
EU157	15.2-H	5.23+01	5.23-01	0.00	0.00	0.00
	TOTALS	3.60+06	3.60+04	1.09+02	8.26+01	4.66+01

* - STABLE NUCLIDES ARE GIVEN IN GRAMS

EXPONENTIAL NOTATION IS EMPLOYED (1.23+01 REPRESENTS 12.3)

DISTRIBUTION

	No. of Copies
DOE/HQ	
T. Nguyen	2
DOE/ORO	
S. S. Perkins	2
ORNL	
C. W. Forsberg	1
A. R. Irvine	1
K. J. Notz	5
R. Salmon	1
T. D. Welch	1
Central Files	1
Waste Library	1